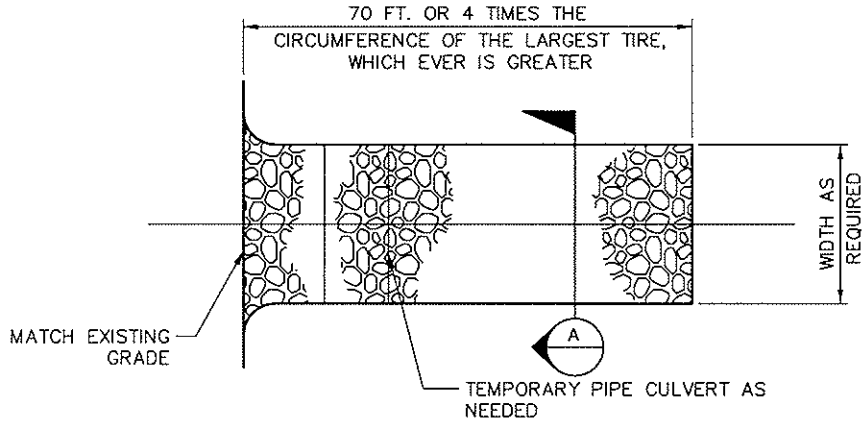

PLAN VIEW

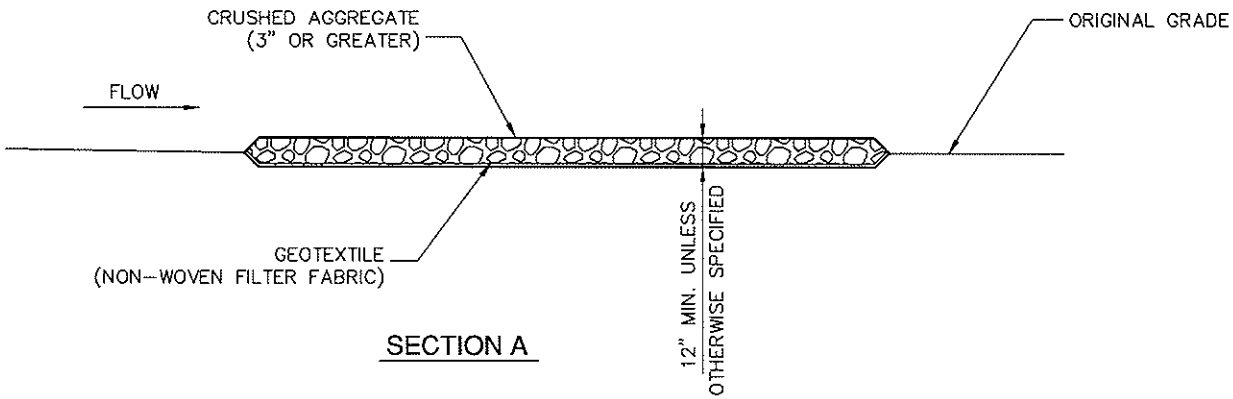

SECTION A

STABILIZED CONSTRUCTION ENTRANCE DETAIL

SCALE: N. T. S.

1

J-U-B ENGINEERS, INC.

LAST UPDATE: 9/27/2010
PLOT DATE: 9/27/2010
FILE: STABILIZED CONSTRUCTION ENTRANCE DETAIL

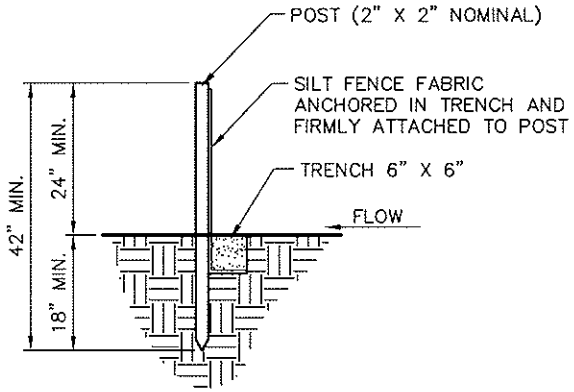

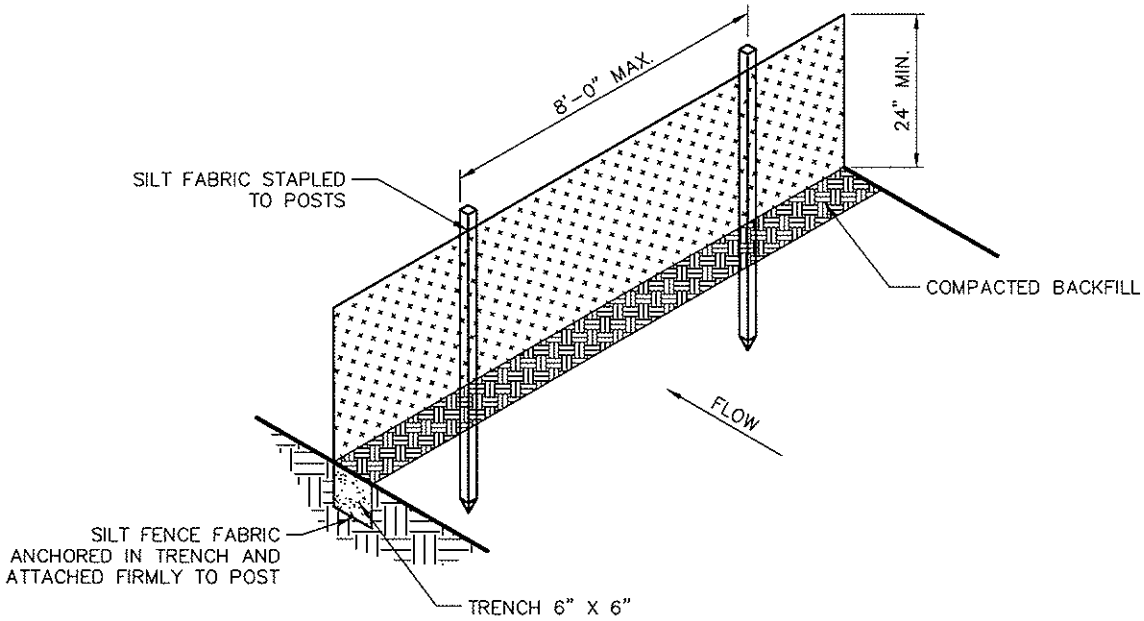

NOTES:

1. MINIMUM FILTER FABRIC HEIGHT SHALL BE 24".
2. POSTS FOR SILT FENCES SHALL BE METAL OR HARD WOOD WITH A MINIMUM LENGTH OF 36". WOOD POSTS SHALL HAVE A MINIMUM DIAMETER OR CROSS SECTION OF 2". METAL POSTS SHALL BE "STUDDED TEE" OR "U" TYPE WITH MINIMUM WEIGHT OF 1.33 LBS/FOOT.
3. DRIVE POSTS VERTICALLY INTO THE GROUND TO A MINIMUM DEPTH OF 18", AND EXCAVATE A TRENCH APPROXIMATELY 6" WIDE AND 6" DEEP ALONG THE LINE OF POSTS AND UPSLOPE FROM THE BARRIER. NO LESS THAN THE BOTTOM 1 FOOT OF THE FABRIC SHALL BE BURIED INTO THIS TRENCH.
4. THE FILTER FABRIC MATERIALS SHALL BE FASTENED SECURELY TO METAL OR WOOD POSTS USING WIRE TIES, OR TO THE WOOD POSTS WITH ¾" LONG #9 HEAVY DUTY STAPLES.
5. POSTS SHALL BE SPACED A MAXIMUM OF 8 FEET APART.

SILT FENCE DETAIL 2

SCALE: N. T. S.

J-U-B ENGINEERS, INC.

LAST UPDATE: 9/27/2010
PLOT DATE: 9/27/2010
FILE: SILT FENCE DETAIL

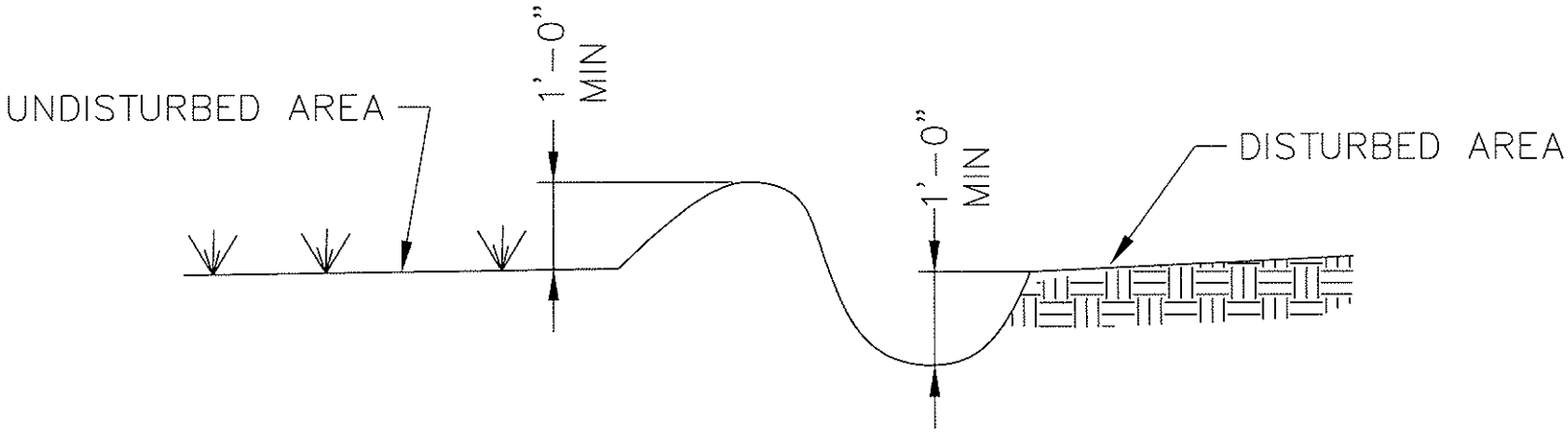

SWALE / BERM DETAIL 3

SCALE: N. T. S.

J-U-B ENGINEERS, INC.

LAST UPDATE: 9/27/2010
PLOT DATE: 9/27/2010
FILE: BERM-SWALE DETAIL

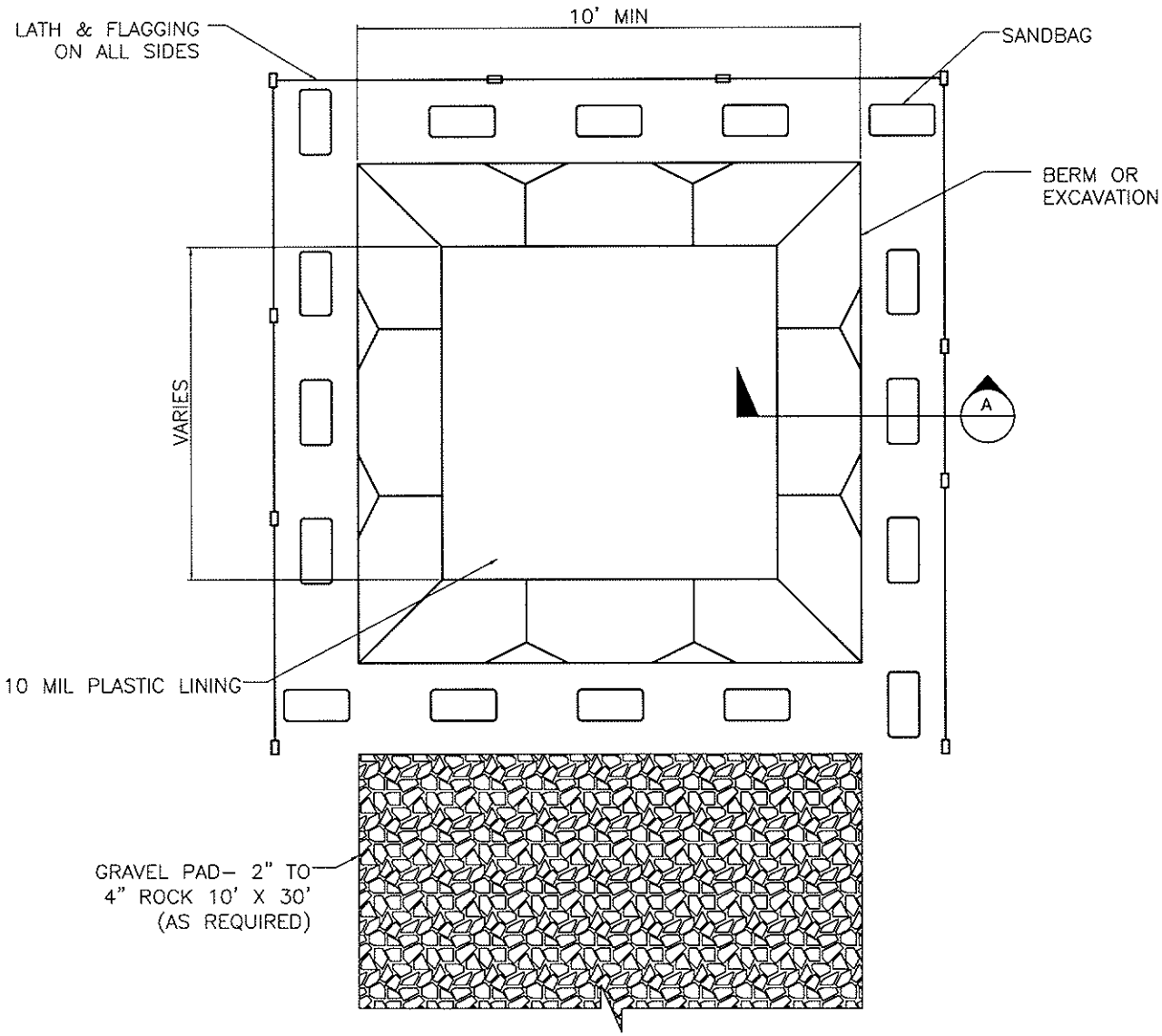

PLAN

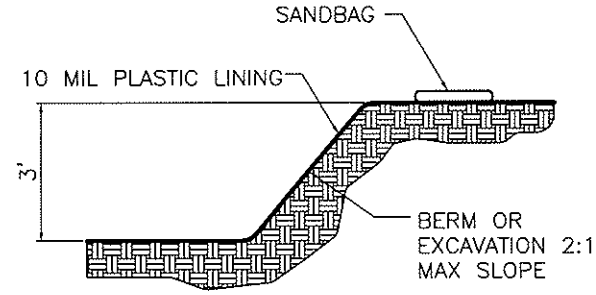

SECTION A

NOTES:
1. ACTUAL LAYOUT DETERMINED IN FIELD.
2. CONCRETE WASHOUT SIGN SHALL BE INSTALLED WITHIN 30 FT. OF THE TEMPORARY CONCRETE WASHOUT FACILITY.
3. WASHOUT NEEDS TO BE EMPTIED AND REPAIRED WHEN 75% OF STORAGE CAPACITY IS FILLED.
4. DEVELOPER/CONTRACTOR RESPONSIBLE FOR REMOVAL & PROPER DISPOSAL OF CONCRETE PRIOR TO FILING N.O.T

CONCRETE WASHOUT DETAIL 4

SCALE: N. T. S.

J-U-B ENGINEERS, INC.

LAST UPDATE: 9/27/2010
PLOT DATE: 9/27/2010
FILE: CONCRETE WASHOUT

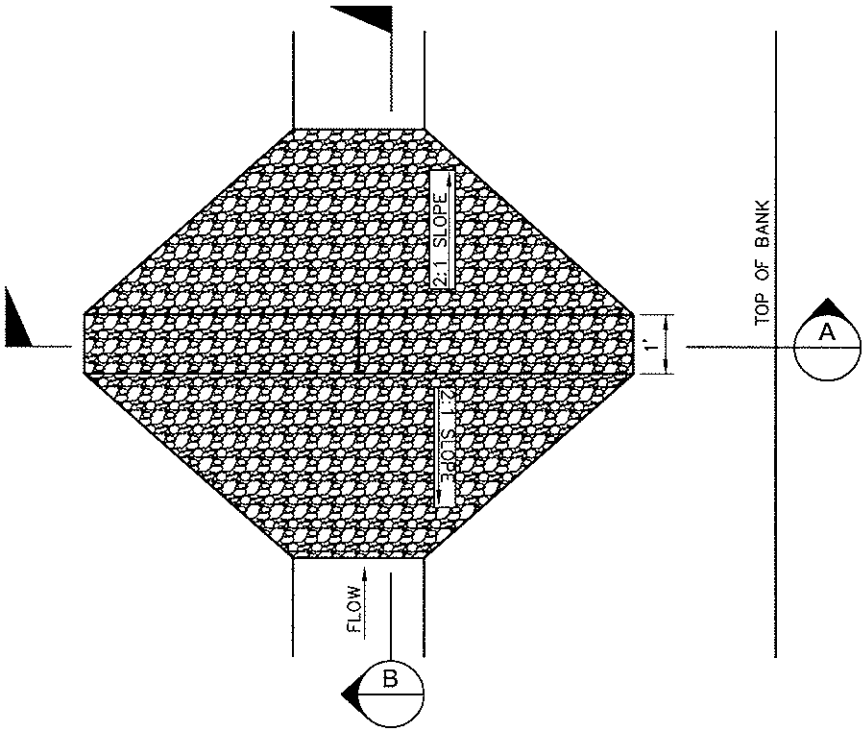

PLAN VIEW

DITCH ROCK CHECK DAM (5)

SCALE: N.T.S.

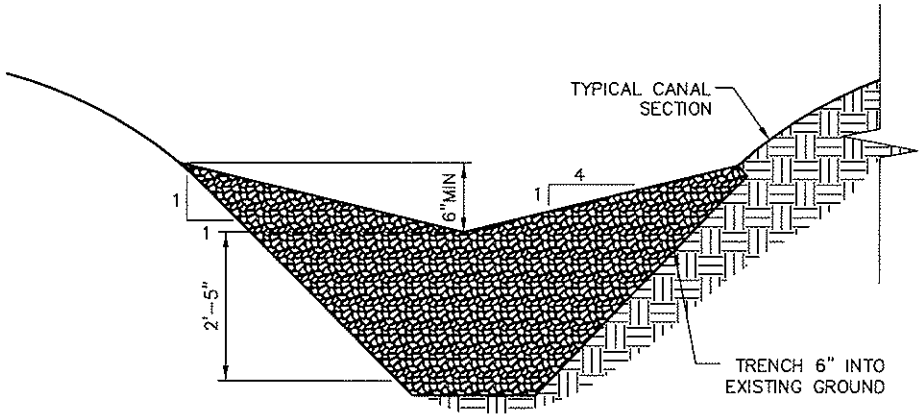

SECTION (A)

SCALE: N.T.S.

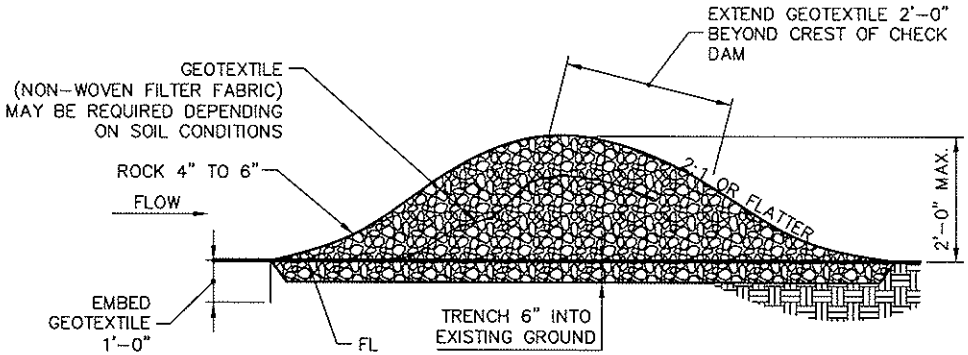

SECTION (B)

SCALE: N.T.S.

J-U-B ENGINEERS, INC.

LAST UPDATE: 9/27/2010
PLOT DATE: 9/27/2010
FILE: ROCK CHECK DAM - DITCH

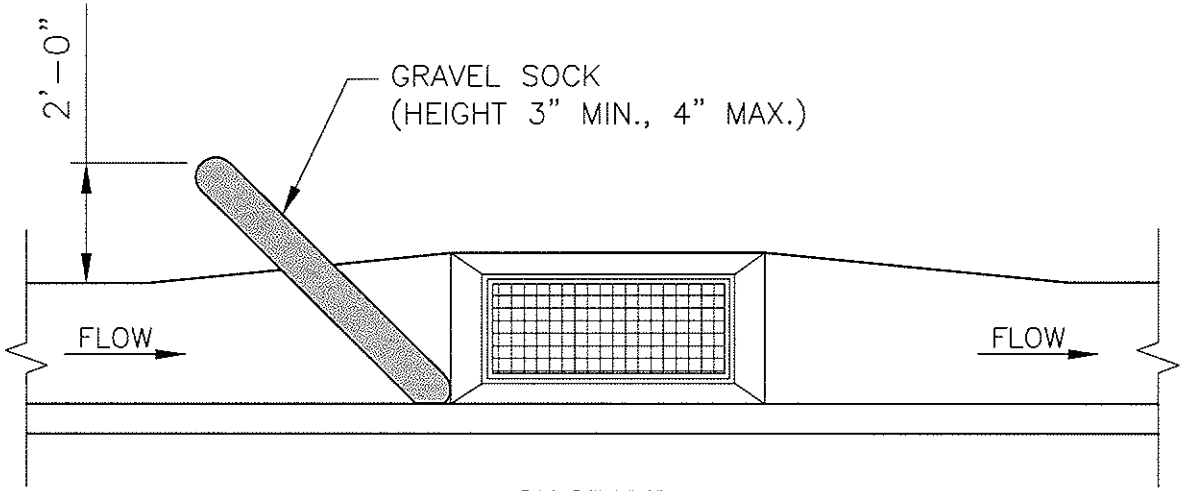

ON GRADE

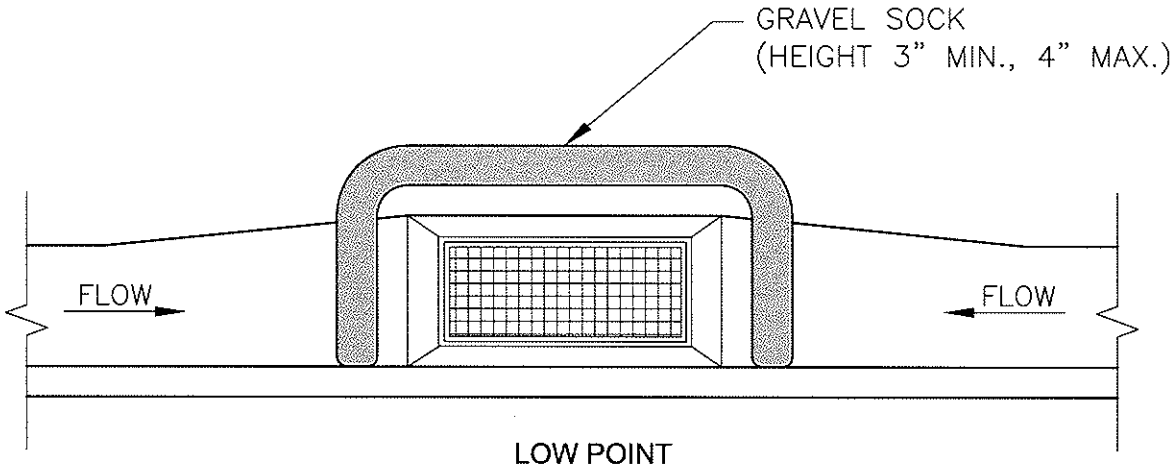

LOW POINT

6 INLET PROTECTION DETAIL
SCALE:N.T.S.

J-U-B ENGINEERS, INC.

LAST UPDATE: 9/27/2010
PLOT DATE: 9/27/2010
FILE:INLET PROTECTION 1