CITY OF NORTH LOGAN

STANDARD DRAWINGS FOR ROAD AND UTILITY CONSTRUCTION

DWG. #	DESCRIPTION	DATE
A1	55' ROW STD. STREET CROSS SECTION	06-05-01
A2	60' ROW STD. STREET CROSS SECTION	06-05-01
A3	66' ROW STD. STREET CROSS SECTION	06-05-01
A4	80' ROW STD. STREET CROSS-SECTION	10-12-95
A5	100' ROW STD. STREET CROSS-SECTION	10-12-95
A7	CONVENTIONAL DRIVEWAYS	10-12-95
A9	CONCRETE DRIVEWAYS	10-12-95
A10	MARICOPA EDGE	10-12-95
A11	INLET & OUTLET GUTTER TRANS.	10-12-95
A12	PRECAST CONCRETE BARRIER	01-26-96
A13	HANDICAP ACCESS RAMPS	01-26-96
A14	SIDEWALK & INTERSECTION DETAIL	02-02-96
A15	SIDEWALK & INTERSECTION DETAIL	10-12-95
A16	CROSS SECTION PLAN & DETAIL	10-12-95
B1	OBJECT MARKERS A	10-12-95
B2	OBJECT MARKERS B	10-12-95
B3	TYP SPEED & INTERS. MARKERS	10-12-95
B4	DELINEATION DETAIL	10-12-95
C1	SEWER MANHOLE DETAIL	08-26-96
C2	SEWER MANHOLE LID DETAIL	08-26-96
C3	TYP. SEWER SERVICE CONNECTION	02-07-96
C4	DUPLEX SEWAGE EJECTOR PUMP	12-22-95
D1	4" & 3" METER STATION DETAIL	03-14-01

DWG. #	DESCRIPTION	DATE
D2	WATER MANHOLE DETAIL	03-14-01
D3	CONNECTION BANDS FOR C.M.P. PIPE	03-21-96
D4	METAL CULVERT END SECTIONS	10-12-95
D5	FIRE HYDRANT DETAIL	10-12-95
D6	TYP. WATER METER DETAIL	10-12-95
D7	TYP. THRUST BLOCK DIM.	10-12-95
D8	TYP. WATER VALVE DETAIL	10-12-95
D9	TYP. WATER VALVE CUTOUT	08-26-96
M1	TYP. FENCE DETAIL	10-12-95
M2	TYP. FENCE AT INTERSECTIONS	10-12-95
M3	TYP. JUNCTION BOX DETAIL	02-05-96
M4	CITY STREET MONUMENT DETAIL	10-12-95
M5	TYP. BACKFILL OVER PIPE LINES	10-12-95

55' CONVENTIONAL STREET

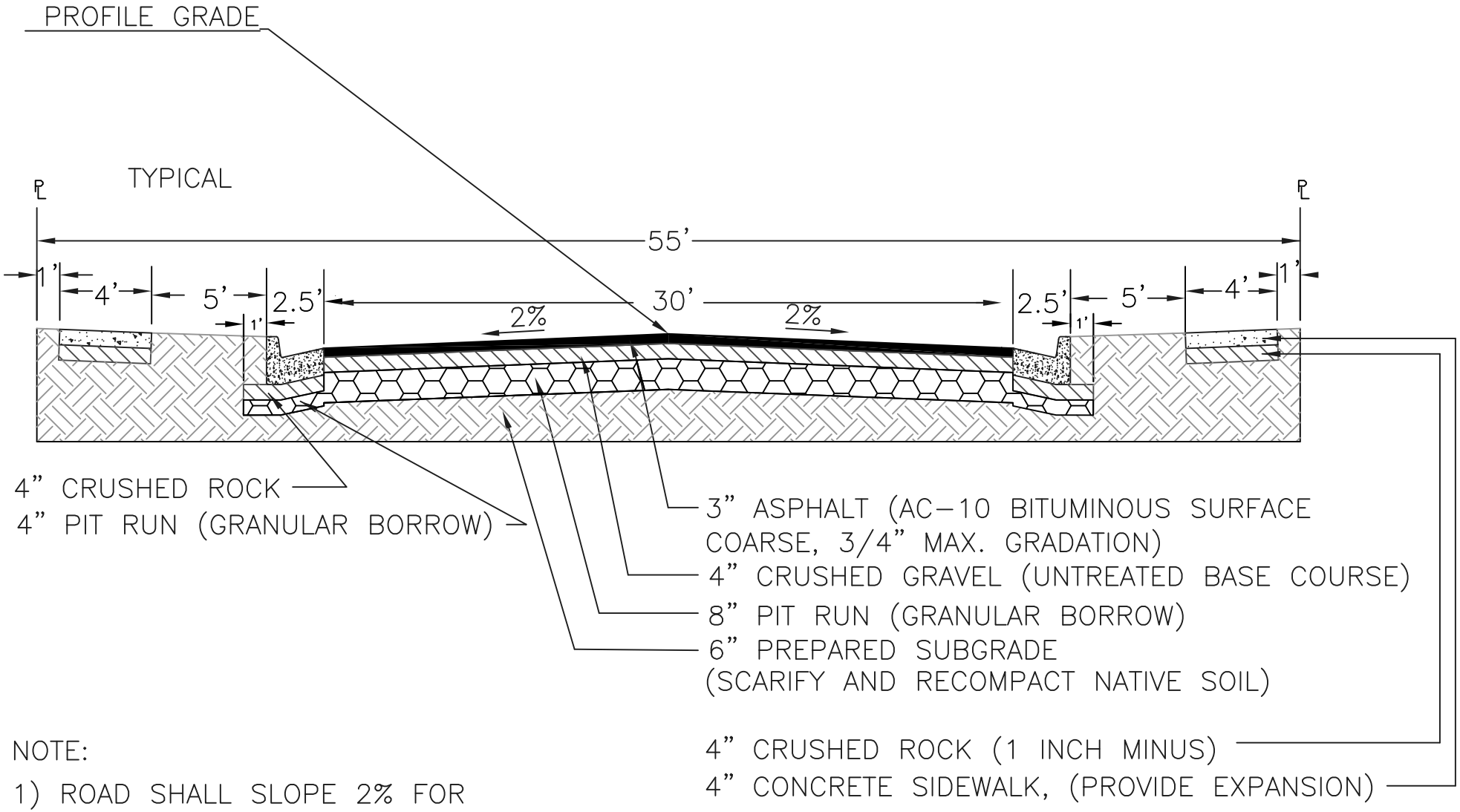

NOTE:

1) ROAD SHALL SLOPE 2% FOR
2) SIDEWALK SHALL HAVE A 2% SLOPE
3) THESE STREETS CAN SERVICE UP TO 25 RESIDENCES WITH A MAXIMUM DESIGN
4) THESE STREETS ALLOW FOR STAGGERED PARKING ALONG THE STREET.

Standard Drawing Detail

NORTH LOGAN CITY
ENGINEERING DEPARTMENT
2076 NORTH 1200 EAST
NORTH LOGAN, UT 84341
(435) 752-1310

Name:	**55' Street Cross Section**
Drawing Number:	A1
Date Approved:	08/10/2004
Scale:	Not to Scale
File:	C:\CITY_MAPPING\AUTOCAD\DSTMDwgs\dwg\a01_55'street.dwg
Notes:	

60' CONVENTIONAL STREET

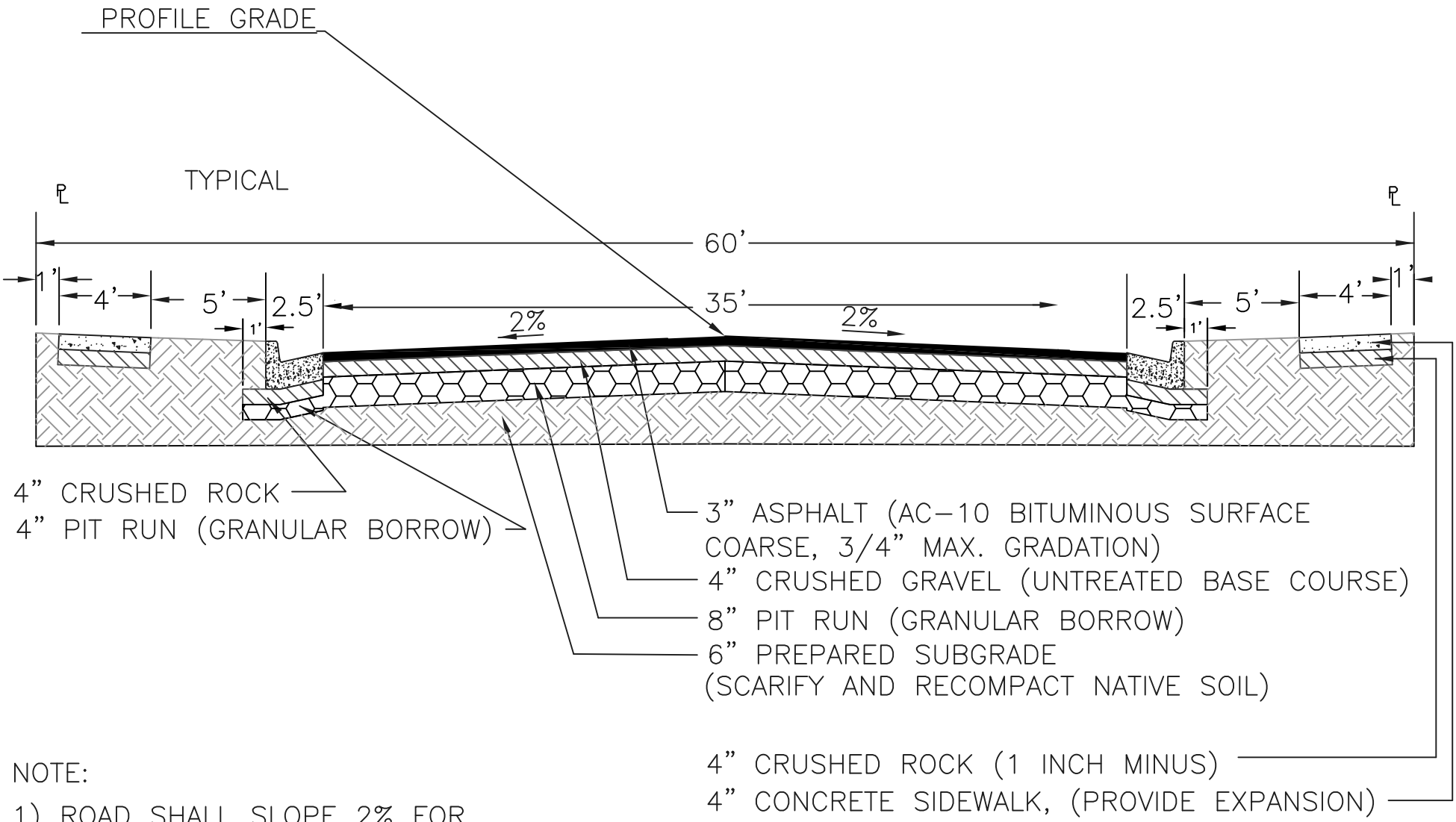

NOTE:

1) ROAD SHALL SLOPE 2% FOR
2) SIDEWALK SHALL HAVE A 2% SLOPE
3) THESE STREETS CAN SERVICE UP TO 25 RESIDENCES WITH A MAXIMUM DESIGN
4) THESE STREETS ALLOW FOR STAGGERED PARKING ALONG THE STREET.

Standard Drawing Detail

NORTH LOGAN CITY
ENGINEERING DEPARTMENT
2076 NORTH 1200 EAST
NORTH LOGAN, UT 84341
(435) 752-1310

Name:	**60' Street Cross Section**
Drawing Number:	A02
Date Approved:	
Scale:	Not to Scale
File:	C:\CITY_MAPPING\AUTOCAD\DSTMDwgs\dwg\A02_60_conventional_street_standard
Notes:	

66' CONVENTIONAL STREET

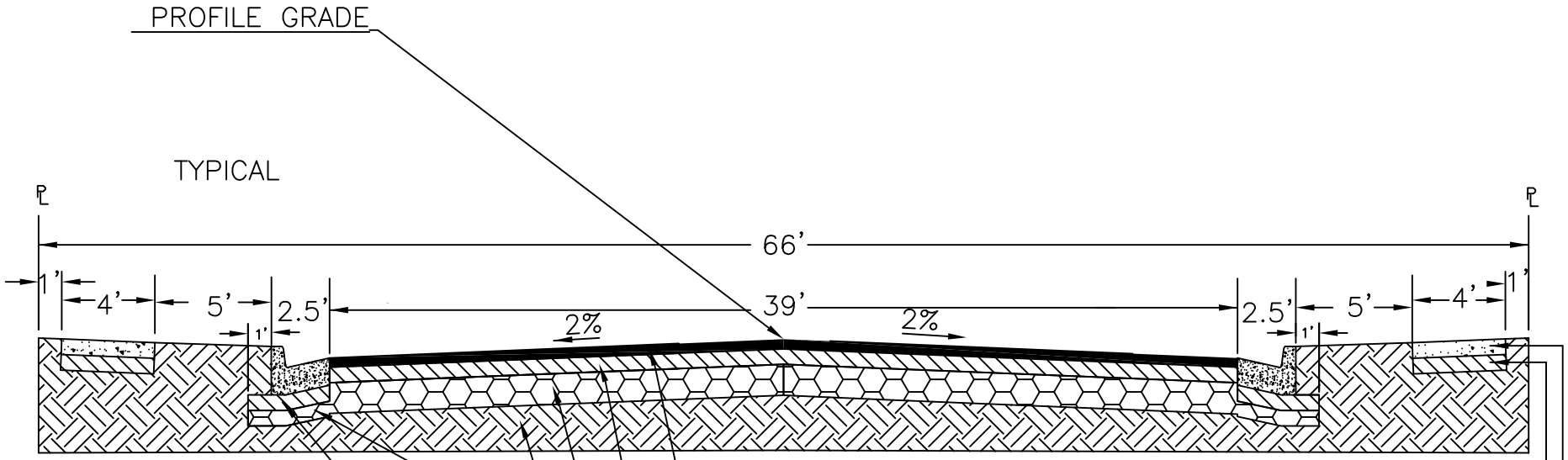

4" CRUSHED ROCK
4" PIT RUN (GRANULAR BORROW)

3" ASPHALT (AC–10 BITUMINOUS SURFACE COARSE, 3/4" MAX. GRADATION)
4" CRUSHED GRAVEL (UNTREATED BASE COURSE)
8" PIT RUN (GRANULAR BORROW)
6" PREPARED SUBGRADE (SCARIFY AND RECOMPACT NATIVE SOIL)

4" CRUSHED ROCK (1 INCH MINUS)
4" CONCRETE SIDEWALK, (PROVIDE EXPANSION)

NOTE:

1) ROAD SHALL SLOPE 2% FOR
2) SIDEWALK SHALL HAVE A 2% SLOPE
3) THESE STREETS CAN SERVICE UP TO 25 RESIDENCES WITH A MAXIMUM DESIGN
4) THESE STREETS ALLOW FOR STAGGERED PARKING ALONG THE STREET.

NORTH LOGAN CITY
2076 NORTH 1200 EAST
NORTH LOGAN, UT 84341
(801) 752–1310

REVISIONS		PROJECT: 60' STREET CROSS SECTIONS
Date	Appr.	
06/05/01		
		SCALE: NOT TO SCALE
		FILE: A02_60'STREET.DWG
		STD. DWG. A2

66' PROPOSED CONVENTIONAL STREET

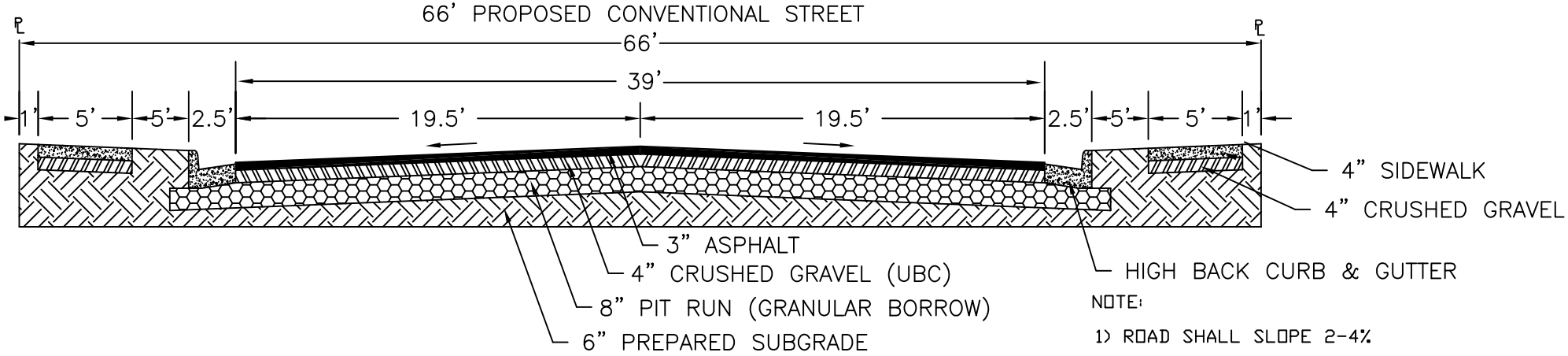

NOTE:

1) ROAD SHALL SLOPE 2-4%
2) SIDEWALK SHALL HAVE A 2% SLOPE.
3) THESE STREETS ALLOW FOR PARKING ON BOTH SIDES OF THE STREET.
4) THESE STREETS SERVICE A MINIMUM OF 3000 ADT WITH A DESIGN SPEED OF 40 MPH.

66' PROPOSED LOW IMPACT ROADWAY

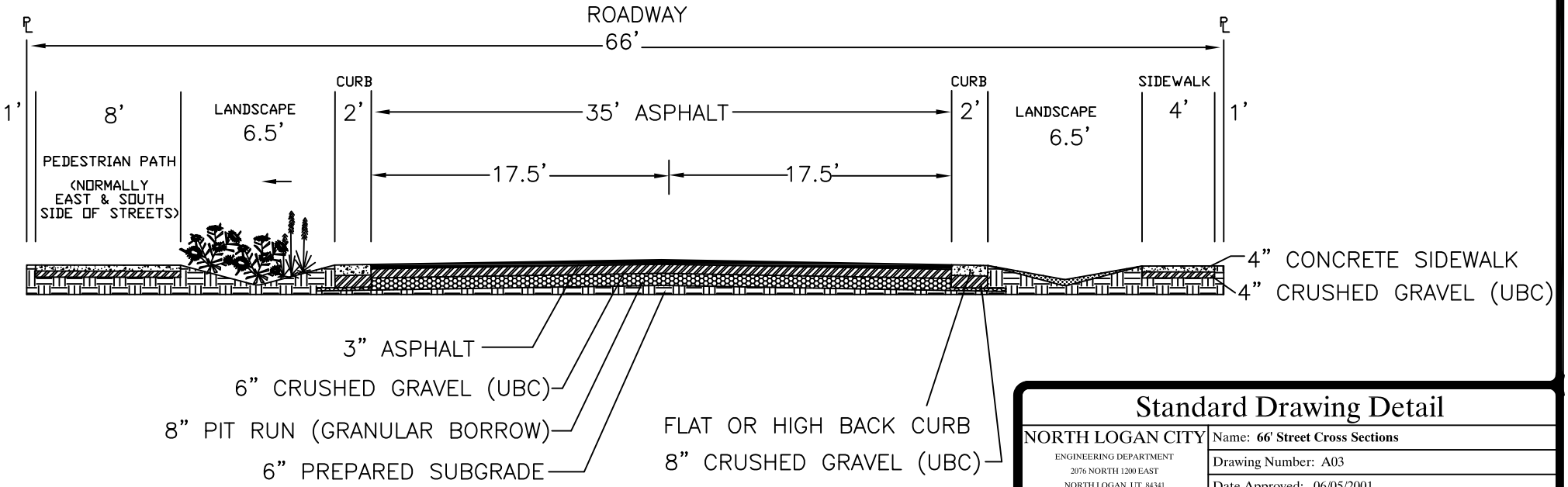

FOR SIDEWALK, CURB & GUTTER, AND SWALE LAYOUT SEE DETAILS SHEET.

Standard Drawing Detail

NORTH LOGAN CITY ENGINEERING DEPARTMENT 2076 NORTH 1200 EAST NORTH LOGAN, UT 84341 (435) 752-1310	Name: **66' Street Cross Sections**
	Drawing Number: A03
	Date Approved: 06/05/2001
	Scale: Not to Scale
	File: C:\CITY_MAPPING\AUTOCAD\DSTMDwgs\dwg\A03_66 STREET PROPOSED?
	Notes:

80' CONVENTIONAL STREET

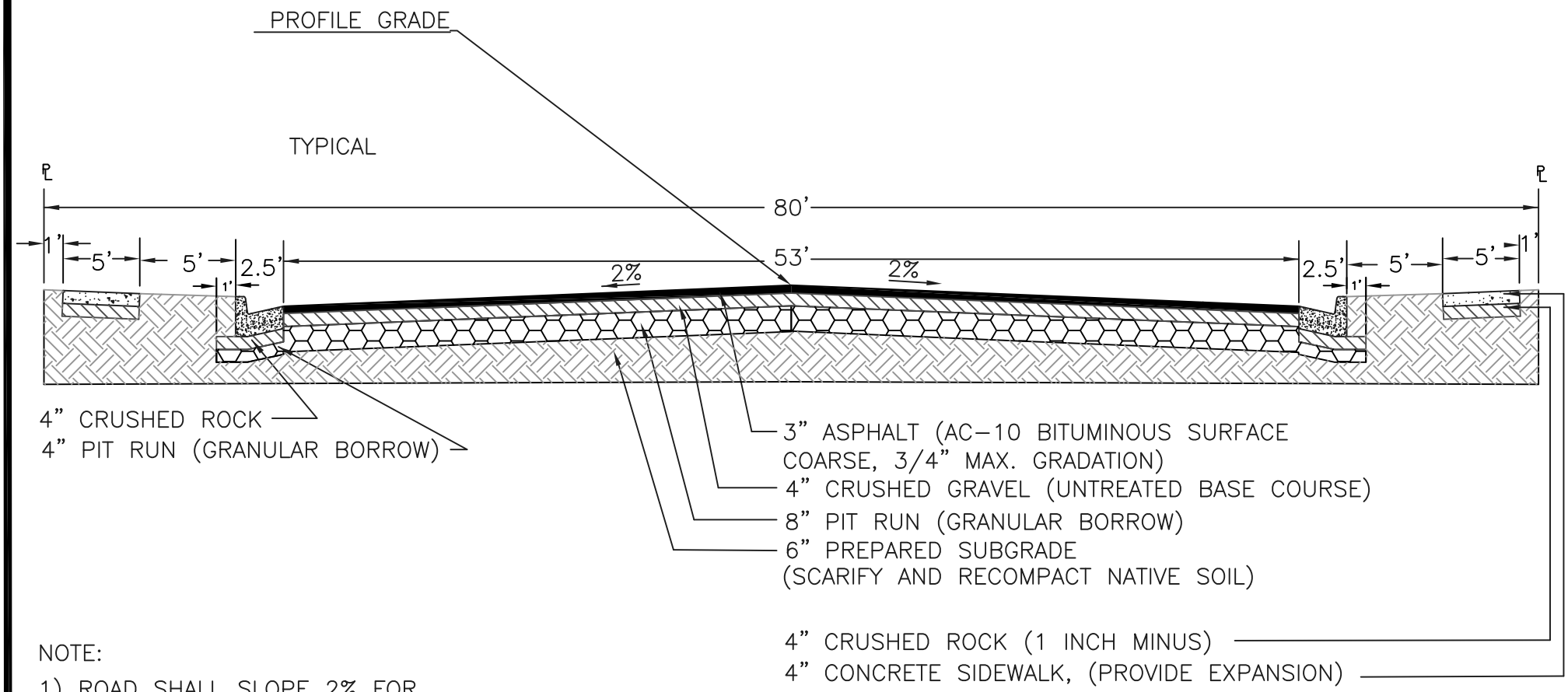

NOTE:

1) ROAD SHALL SLOPE 2% FOR
2) SIDEWALK SHALL HAVE A 2% SLOPE
3) THESE STREETS CAN SERVICE UP TO 25 RESIDENCES WITH A MAXIMUM DESIGN
4) THESE STREETS ALLOW FOR STAGGERED PARKING ALONG THE STREET.

Standard Drawing Detail

NORTH LOGAN CITY
ENGINEERING DEPARTMENT
2076 NORTH 1200 EAST
NORTH LOGAN, UT 84341
(435) 752-1310

Name:	**80' Street Cross Section**
Drawing Number:	A04
Date Approved:	08/11/04
Scale:	Not to Scale
File:	C:\CITY_MAPPING\AUTOCAD\DSTMDwgs\dwg\A04_80
Notes:	

100' RIGHT-OF-WAY

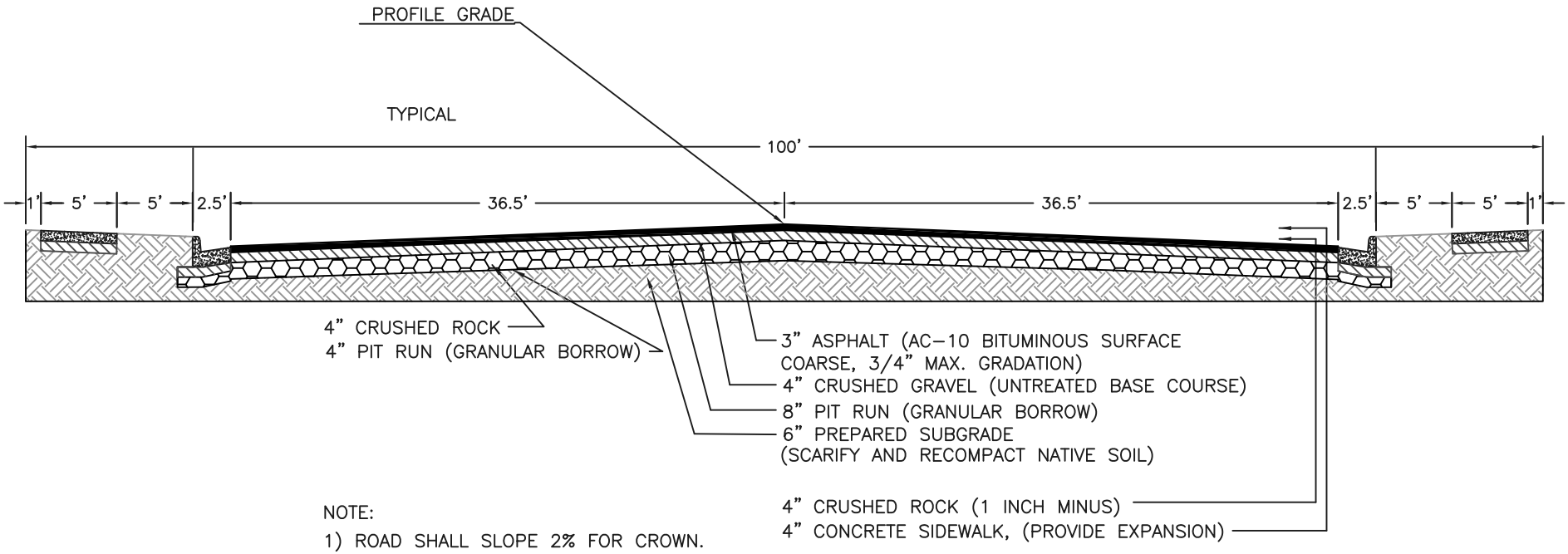

NOTE:

1) ROAD SHALL SLOPE 2% FOR CROWN.
2) SIDEWALK SHALL HAVE A 2% SLOPE TOWARD TBC.
3) THESE STREETS CAN SERVICE UP TO 25 RESIDENCES WITH A MAXIMUM DESIGN
4) THESE STREETS ALLOW FOR STAGGERED PARKING ALONG THE STREET.

Standard Drawing Detail

NORTH LOGAN CITY
ENGINEERING DEPARTMENT
2076 NORTH 1200 EAST
NORTH LOGAN, UT 84341
(435) 752-1310

Name:	**80' Street Cross Section**
Drawing Number:	A04
Date Approved:	08/11/04
Scale:	Not to Scale
File:	C:\CITY_MAPPING\AUTOCAD\DSTMDwgs\dwg\A04_80
Notes:	

CURB & GUTTER

CONVENTIONAL STREET CURB & SIDEWALK DETAILS

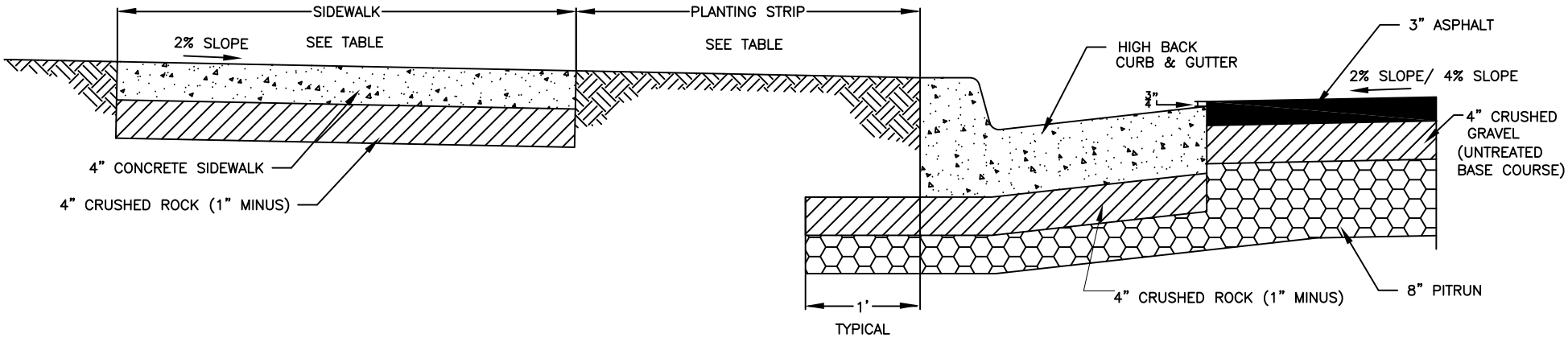

CROSS SECTION TABLE

STREET RIGHT–OF–WAY	SIDEWALK WIDTH (ft)	PLANTING STRIP WIDTH (ft)
50'	4	3
60'	4	3
66'	5	3
80'	5	5
100'	5	5

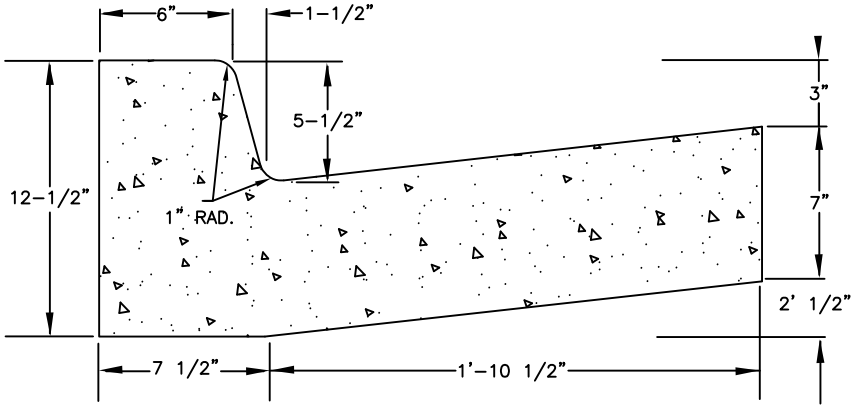

TYPE A
HIGH BACK CURB & GUTTER

Standard Drawing Detail

NORTH LOGAN CITY
ENGINEERING DEPARTMENT
2076 NORTH 1200 EAST
NORTH LOGAN, UT 84341
(435) 752-1310

Name:	**Conventional Street Details**
Drawing Number:	A5
Date Approved:	06/05/2001
Scale:	Not to Scale
File:	C:\CITY_MAPPING\AUTOCAD\DSTMDwgs\dwg\
	A5_CONV_STREETDETAIL.DWG
Notes:	

CONVENTIONAL CIRCULAR DRIVEWAY

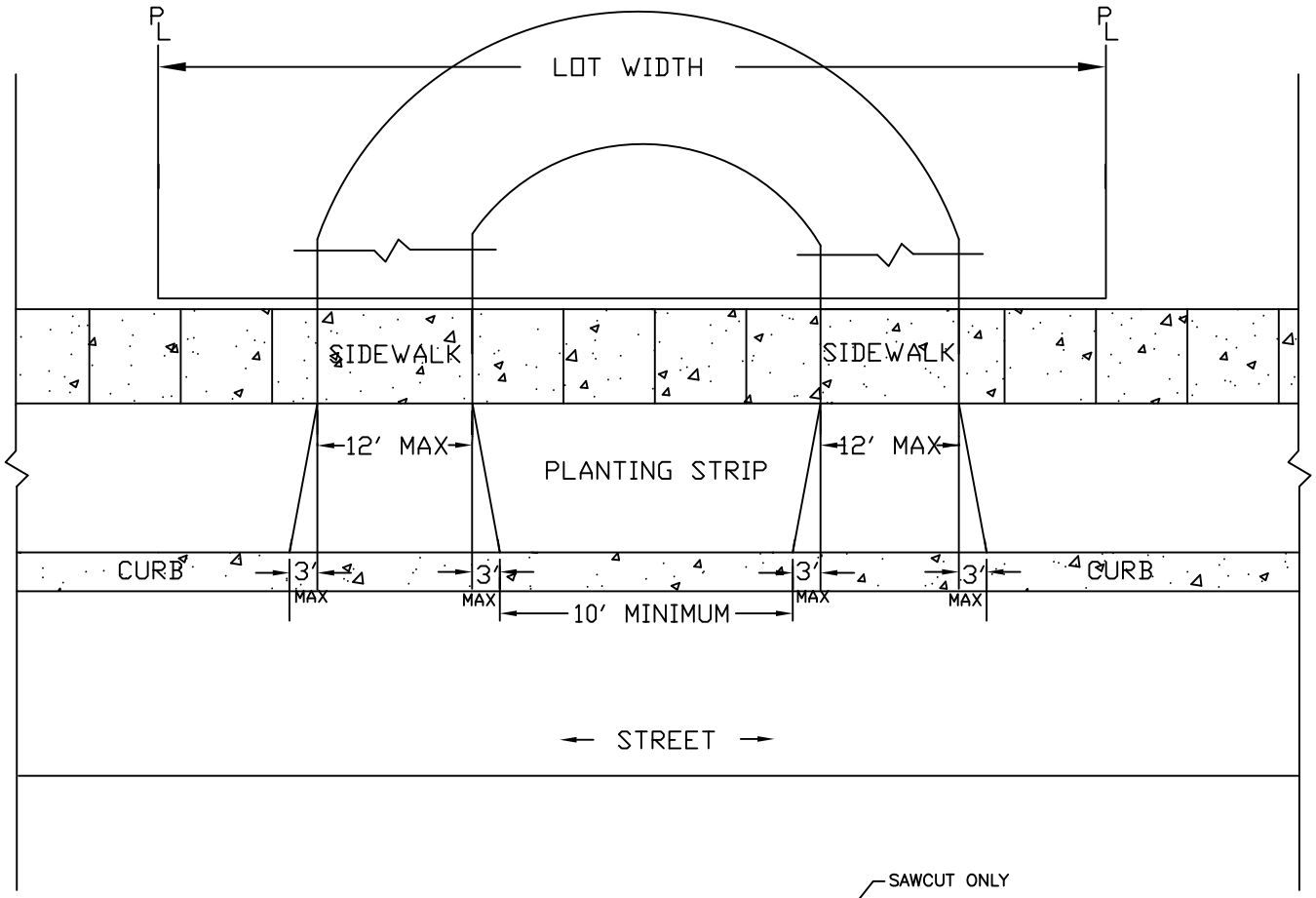

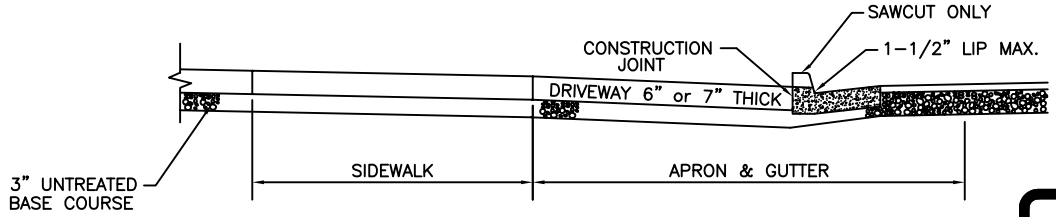

Standard Drawing Detail

NORTH LOGAN CITY
ENGINEERING DEPARTMENT
2076 NORTH 1200 EAST
NORTH LOGAN, UT 84341
(435) 752-1310

Name:	**Conventional Driveways**
Drawing Number:	A7
Date Approved:	10/12/1995
Scale:	Not to Scale
File:	C:\CITY_MAPPING\AUTOCAD\DSTMDwgs\dwg\
	A7_conventional driveway.dwg
Notes:	

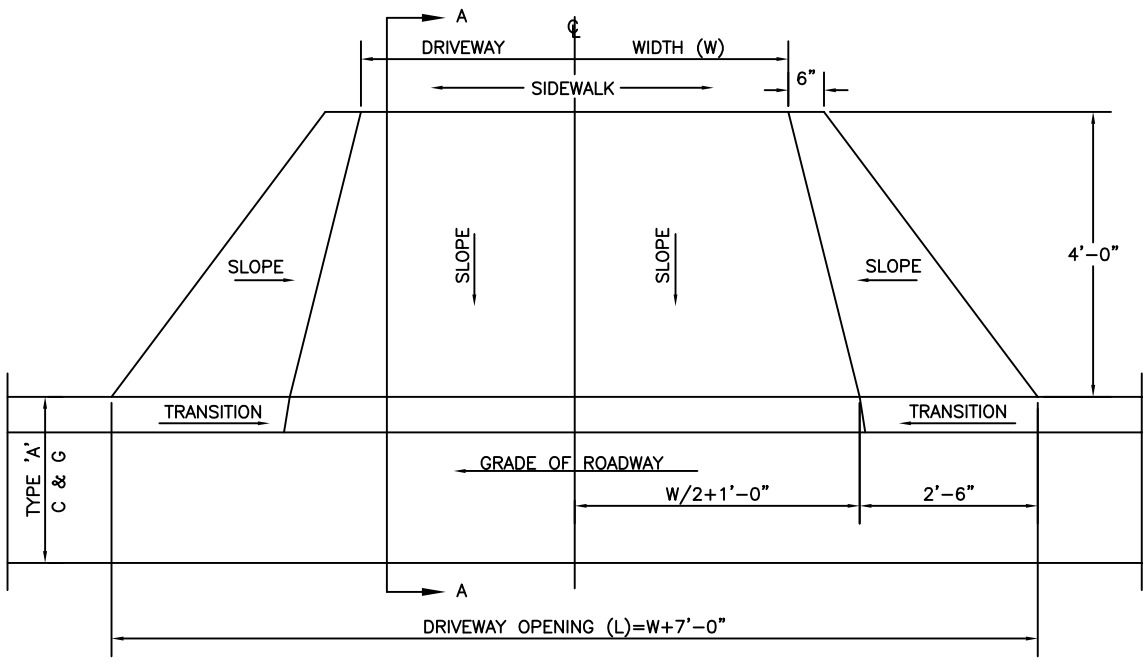

FLARED DRIVEWAY

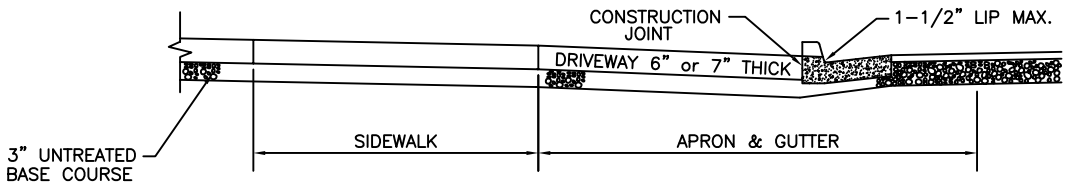

SECTION A–A

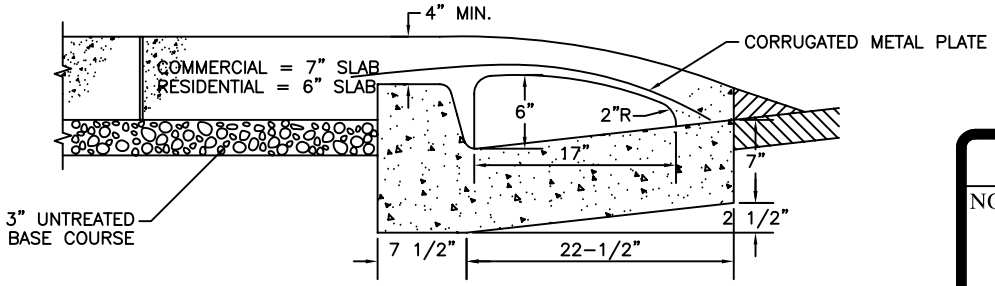

COVERED DRIVEWAY TYPE A

Standard Drawing Detail

NORTH LOGAN CITY
ENGINEERING DEPARTMENT
2076 NORTH 1200 EAST
NORTH LOGAN, UT 84341
(435) 752-1310

Name:	**Concrete Driveways**
Drawing Number:	A9
Date Approved:	10/12/1995
Scale:	Not to Scale
File:	C:\CITY_MAPPING\AUTOCAD\DSTMDwgs\dwg
	\A09_driveway.dwg
Notes:	

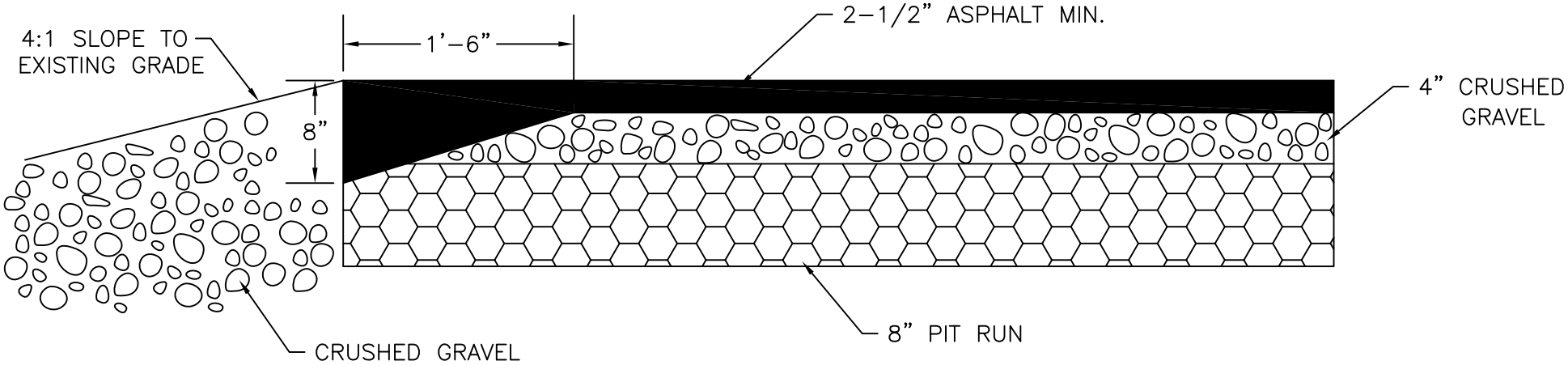

NOTES:

1. To be used when and if conditions warrant elimination of standard curb and gutter
2. This type of construction is warranted only in rural low density areas. Country and rural roads may also have this type of construction
3. This type of construction must be approved by the Planning Commission and the City Engineer.

Standard Drawing Detail

NORTH LOGAN CITY
ENGINEERING DEPARTMENT
2076 NORTH 1200 EAST
NORTH LOGAN, UT 84341
(435) 752-1310

	Name: **Maricopa Edge**
	Drawing Number: A10
	Date Approved: 10/12/1995
	Scale: Not to Scale
	File: C:\CITY_MAPPING\AUTOCAD\DSTMDwgs\dwg
	\A10_ROADEDGE.dwg
	Notes:

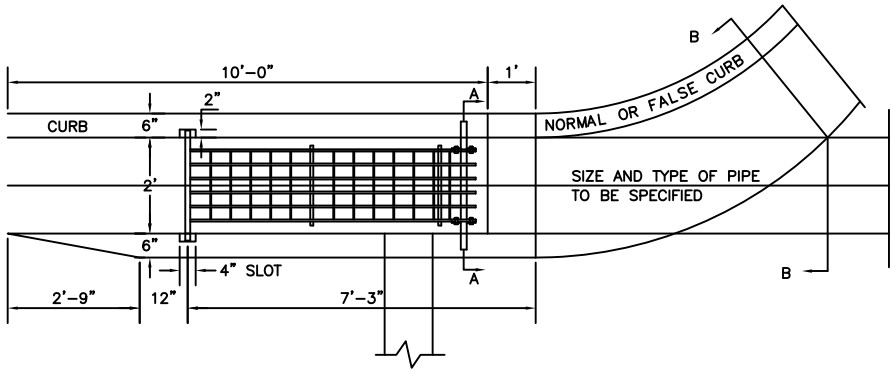

TYPICAL INLET OR OUTLET

PROVIDE 2"x4" SLOT IN CONCRETE CURBS TO ALLOW THE GRATING TO BE OPENED AND A SEAT FOR THE 1/4" • BAR.

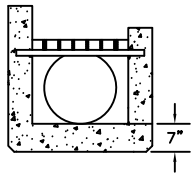

SECTION A–A

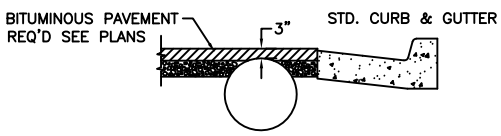

SECTION B–B

CONCRETE OF THE TYPE SPECIFIED FOR CURB AND GUTTER

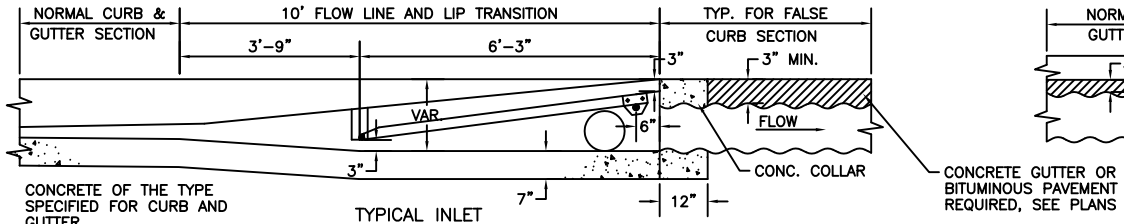

CONCRETE OF THE TYPE SPECIFIED FOR CURB AND GUTTER

TYPICAL INLET
(LONGITUDINAL SECTION)
SHOWING USE OF
FALSE CURB

CONCRETE GUTTER OR BITUMINOUS PAVEMENT REQUIRED, SEE PLANS

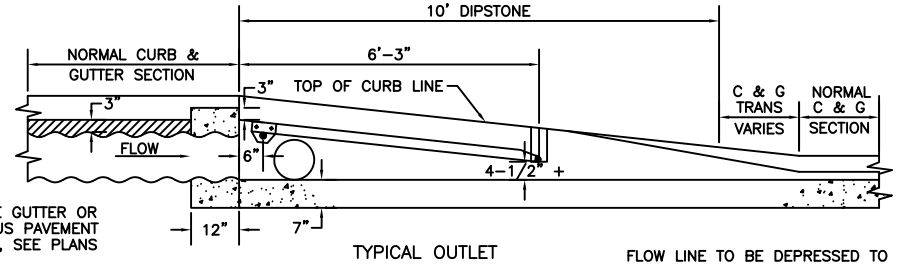

TYPICAL OUTLET
(LONGITUDINAL SECTION)
SHOWING USE OF
NORMAL CURB

FLOW LINE TO BE DEPRESSED TO PROVIDE A MIN. OF 0.1% GRADE TO DRAIN DIPSTONE

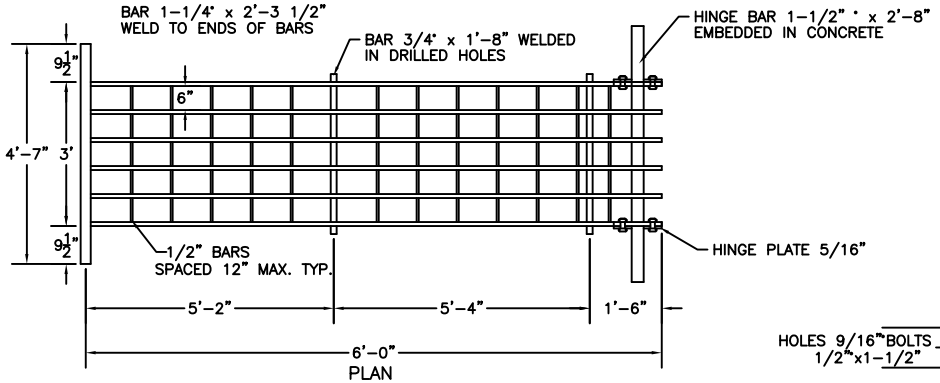

PLAN

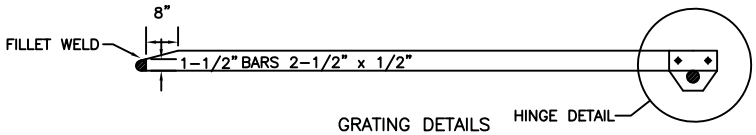

GRATING DETAILS
(SCALE 1/2"=1')

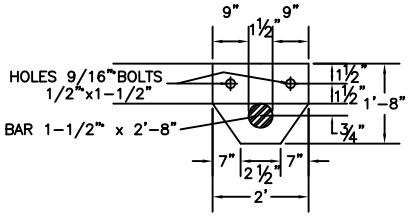

HINGE DETAIL
(SCALE 1"=1')

GENERAL:
THE SIZE AND TYPE OF PIPE TO BE USED UNDER THE STREET SHALL BE SPECIFIED ON THE PLANS.

GRATE:
*THE GRATE SHALL BE WELDED CONSTRUCTION AND FABRICATED OF MILD STRUCTURAL BARS MEETING A.S.T.M. DESIGNATION A–36 (A.A.S.H.T.O. M–183)
*GRATE MUST BE BICYCLE SAFE.

CONCRETE:
ALL CONCRETE SHALL BE SPECIFIED FOR CURB AND GUTTER WITH THE EXCEPTION OF THE CONCRETE CRADLE FOR THE PIPE ARCH. THE CONCRETE CRADLE SHALL BE CLASS 'B' CONCRETE.

Standard Drawing Detail

NORTH LOGAN CITY
ENGINEERING DEPARTMENT
2076 NORTH 1200 EAST
NORTH LOGAN, UT 84341
(435) 752-1310

Name:	**Inlet & Outlet Gutter Transition**
Drawing Number:	A11
Date Approved:	10/12/1995
Scale:	Not to Scale
File:	C:\CITY_MAPPING\AUTOCAD\DSTMDwgs\dwg \A11_GUTTER-INOUT.dwg
Notes:	

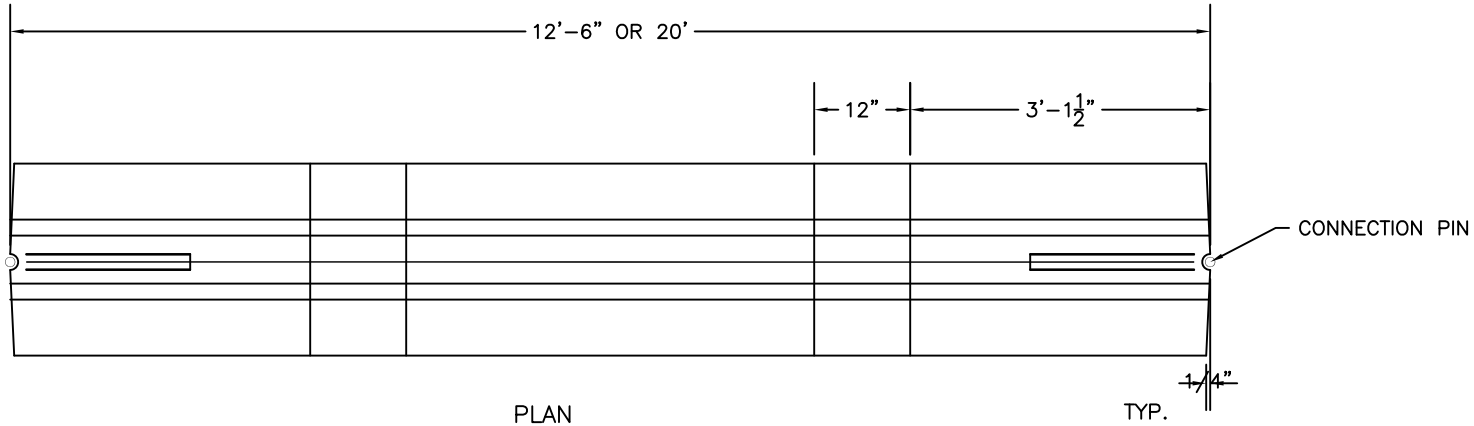

PLAN

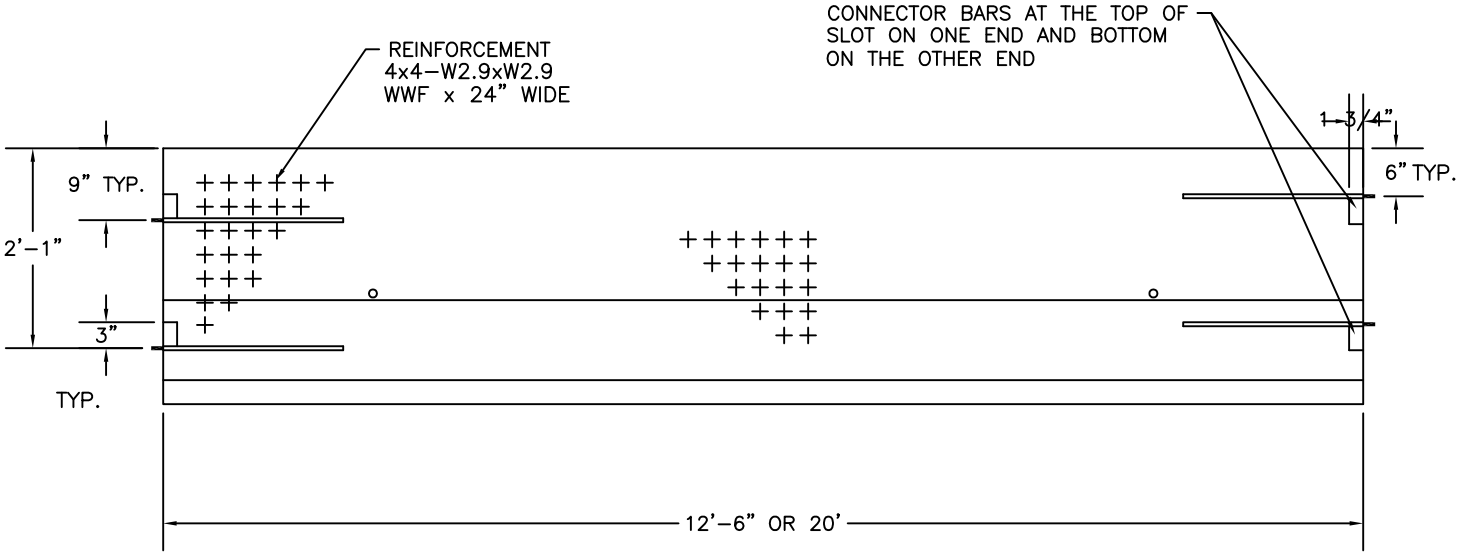

ELEVATION

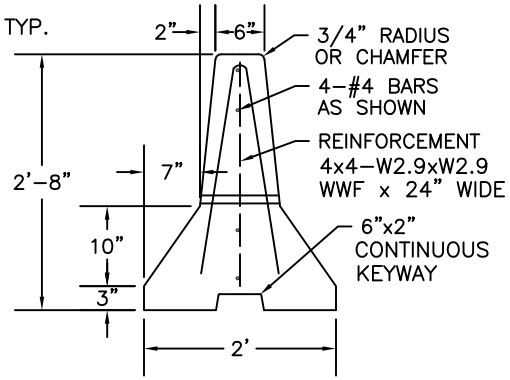

SECTION

Standard Drawing Detail

NORTH LOGAN CITY
ENGINEERING DEPARTMENT
2076 NORTH 1200 EAST
NORTH LOGAN, UT 84341
(435) 752-1310

Name:	**Precast Concrete Barrier**
Drawing Number:	A12
Date Approved:	1/26/1996
Scale:	Not to Scale
File:	C:\CITY_MAPPING\AUTOCAD\DSTMDwgs\dwg\A12_Conc-Bar
Notes:	

WALK FLARED RAMP DETAIL AT PRIVATE DRIVE

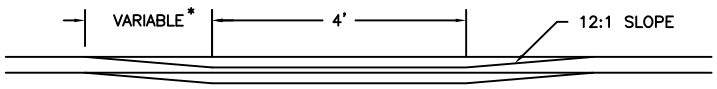

*A FUNCTION OF DISTANCE BETWEEN BACK OF CURB AND FRONT OF SIDEWALK 12:1 SLOPE ON SIDEWALK WILL CONTROL

SECTION C–C

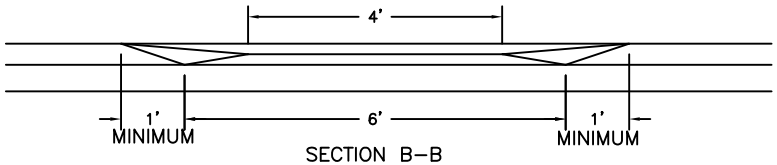

SECTION B–B

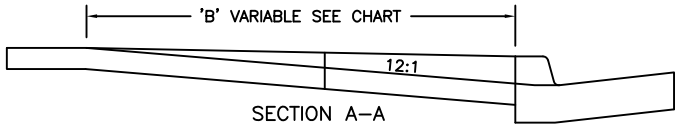

SECTION A–A

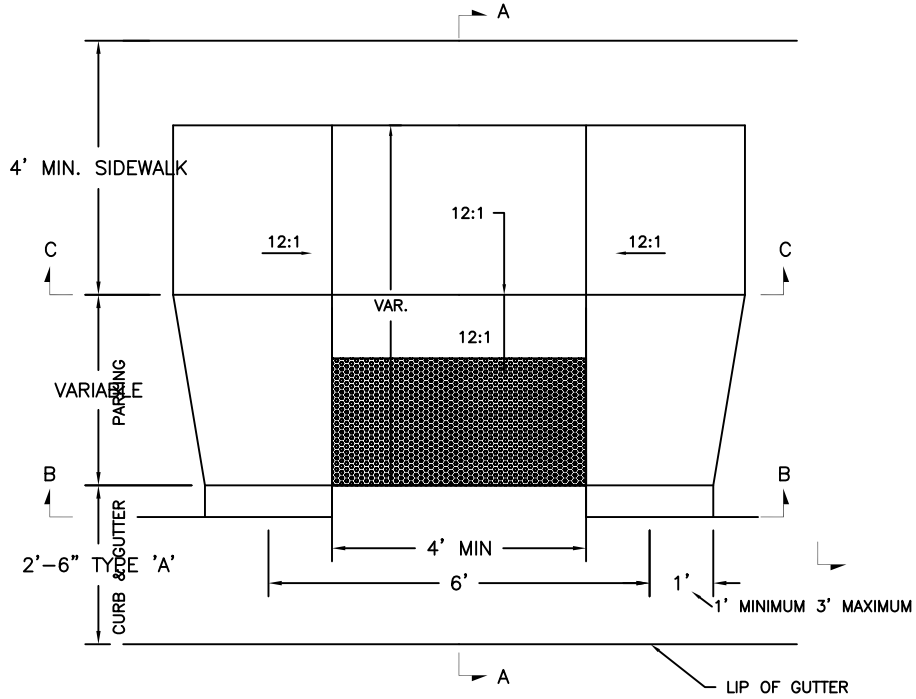

TYPE 'A' RAMP

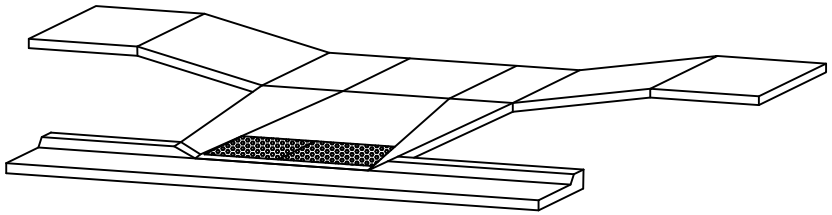

ISOMETRIC VIEW

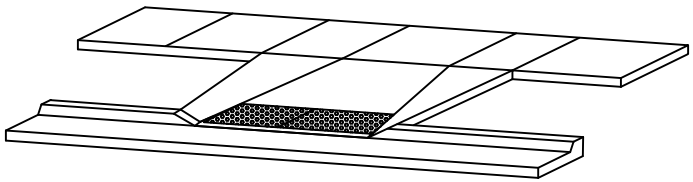

ISOMETRIC VIEW

DISTANCES NECESSARY FOR 12:1 SLOPE ON DISABLED RAMP TO TIE ONTO SIDEWALK SLOPE	
SLOPE A* PERCENTAGE	DISTANCE 'B'
0	5'–0"
+1	5'–9"
+2	6'–9"

NOTES

1. DETECTABLE WARNING SURFACE DOMES SHALL BE ORIENTED SUCH THAT ROWS ARE PARALLEL WITH THE DIRECTION OF PEDESTRIAN TRAVEL TO THE RAMP ON THE OPPOSITE SIDE OF THE STREET.
2. THE STANDARD COLOR FOR THE DETECTABLE WARNING SURFACE SHALL BE RED BRICK OR AS DETERMINED BY THE CITY ENGINEER OR OTHER AUTHORIZED REPRESENTATIVE.
3. WHEN A DETECTABLE WARNING SURFACE DOME IS CUT, THE REMAINING PORTION OF THE DOME SHALL BE BEVELED TO A MAXIMUM SLOPE OF 1:2
4. AT LEAST 1/2 PAVER MUST BE USED (I.E. NO SMALL PIECES OR SLIVERS).
5. NO LIP IN CURB GREATER THAN ¼" HIGH ALLOWED ALONG LENGTH OF RAMP.
6. LENGTHS OF RAMPS VARY AS REQUIRED TO MEET 1(V):6.(H) SLOPE OR FLATTER.
7. ABSOLUTE MINIMUM DIMENSIONS OF LANDING TO BE 48" BY 48"
8. LANDING GLARES TO BE PARALLEL WITH RAMPS.
9. PAVER SAND TO BE UNDERLAIN WITH 3" THICK 4000 PSI CONCRETE WITH ¾" DRAIN HOLES 12" O.C. FILLED WITH SAND.

NORTH LOGAN CITY
2076 NORTH 1200 EAST
NORTH LOGAN, UT 84341
(801) 752–1310

REVISIONS	
Date	Appr.
1/26/96	
08/16/2004	

PROJECT: FLARED RAMP DETAIL

SCALE: NOT TO SCALE
FILE: A13_RAMP.DWG
STD. DWG. A13

WALK RADIUS RAMP DETAIL

CROSS SECTION TABLE

STREET RIGHT-OF-WAY	SIDEWALK WIDTH (ft)	PLANTING STRIP WIDTH (ft)	RAMP WIDTH (ft)
55'- 2*	4	5.5	4
60'	4	5	5
66'	5	5	5
80'	5	5 MINIMUM	5
100'	5	5 MINIMUM	5

NOTE:

DESIGN MUST BE IN COMPLIANCE WITH ANSI A117.1

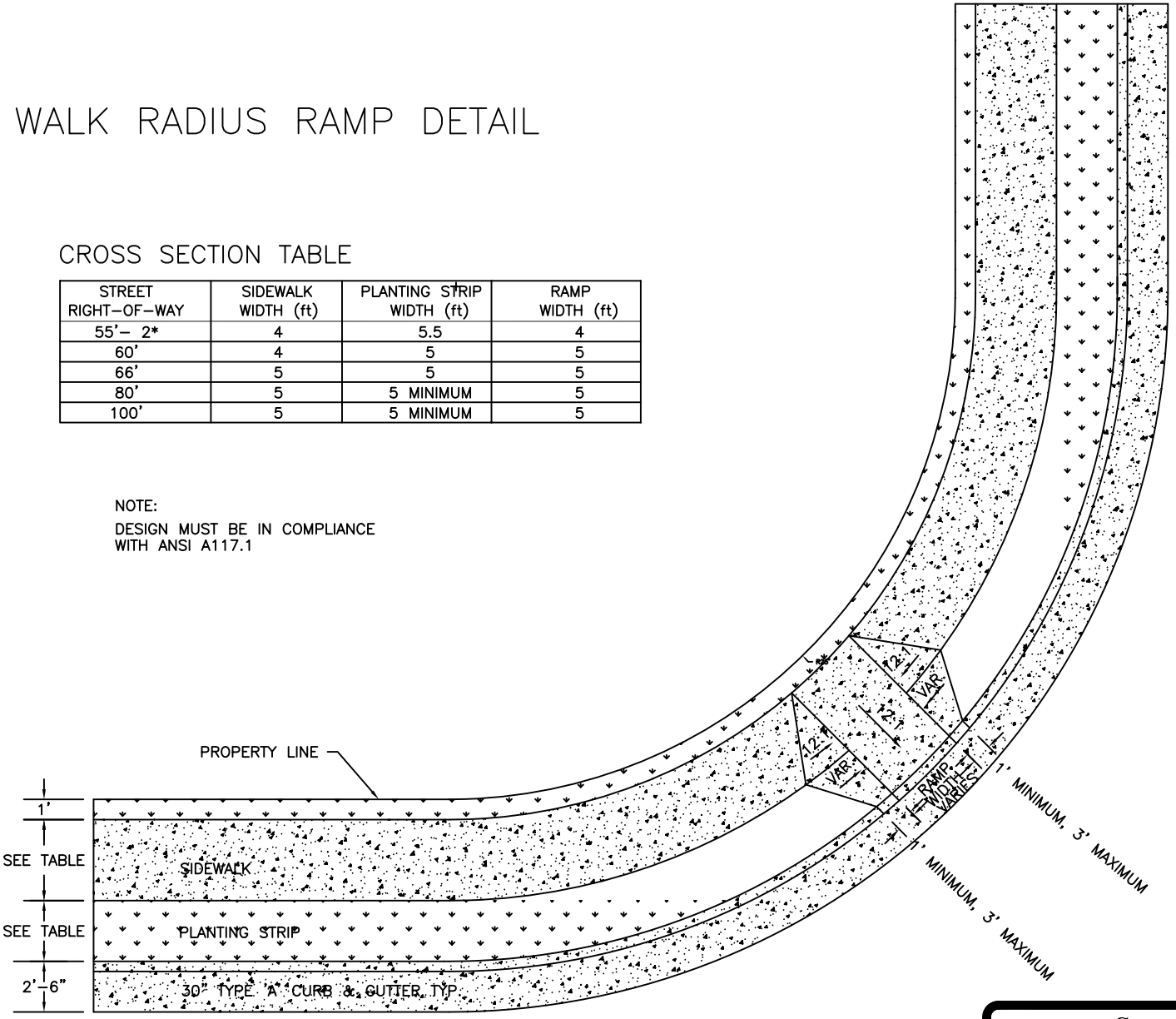

Standard Drawing Detail

NORTH LOGAN CITY
ENGINEERING DEPARTMENT
2076 NORTH 1200 EAST
NORTH LOGAN, UT 84341
(435) 752-1310

Name: **Sidewalk & Intersection Detail**

Drawing Number: A14

Date Approved: 2/2/1996 , 08/16/2004

Scale: Not to Scale

File: C:\CITY_MAPPING\AUTOCAD\DSTMDwgs\dwg\A14_sdwk-int25

Notes:

NOTES

1. DETECTABLE WARNING SURFACE DOMES SHALL BE ORIENTED SUCH THAT ROWS ARE PARALLEL WITH THE DIRECTION OF PEDESTRIAN TRAVEL TO THE RAMP ON THE OPPOSITE SIDE OF THE STREET.
2. THE STANDARD COLOR FOR THE DETECTABLE WARNING SURFACE SHALL BE RED BRICK OR AS DETERMINED BY THE CITY ENGINEER OR OTHER AUTHORIZED REPRESENTATIVE.
3. WHEN A DETECTABLE WARNING SURFACE DOME IS CUT, THE REMAINING PORTION OF THE DOME SHALL BE BEVELED TO A MAXIMUM SLOPE OF 1:2.
4. AT LEAST 1/2 PAVER MUST BE USED (I.E. NO SMALL PIECES OR SLIVERS).
5. NO LIP IN CURB GREATER THAN 1/4 " HIGH ALLOWED ALONG LENGTH OF RAMP.
6. LENGTHS OF RAMPS VARY AS REQUIRED TO MEET 1(V):12(H) SLOPE OR FLATTER.
7. ABSOLUTE MINIMUM DIMENSIONS OF LANDING TO BE 48" BY 48"
8. LANDING FLARES TO BE PARALLEL WITH RAMPS.
9. PAVER SAND TO BE UNDERLAIN WITH 3" THICK 4000 PSI CONCRETE WITH 3/4" DRAIN HOLES 12' O.C. FILLED WITH SAND

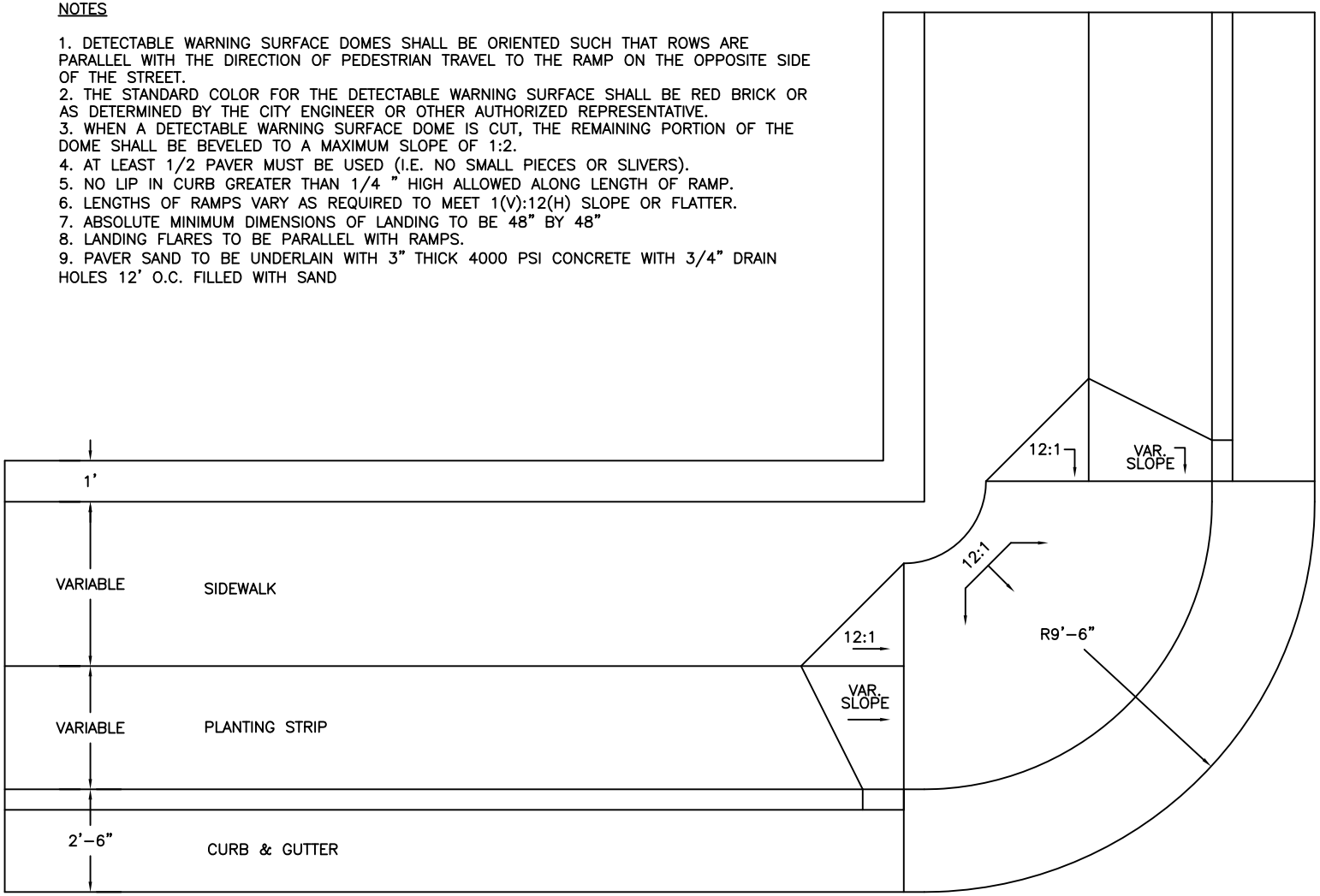

Standard Drawing Detail

NORTH LOGAN CITY
ENGINEERING DEPARTMENT
2076 NORTH 1200 EAST
NORTH LOGAN, UT 84341
(435) 752-1310

Name:	**Sidewalk & Intersection Detail**
Drawing Number:	A15
Date Approved:	10/12/1995
Scale:	Not to Scale
File:	C:/CITY_MAPPING/AUTOCAD/DSTMDwgs/dwg/A15_sdwk-int10
Notes:	

"SURFACE," CROSS DRAIN DETAIL

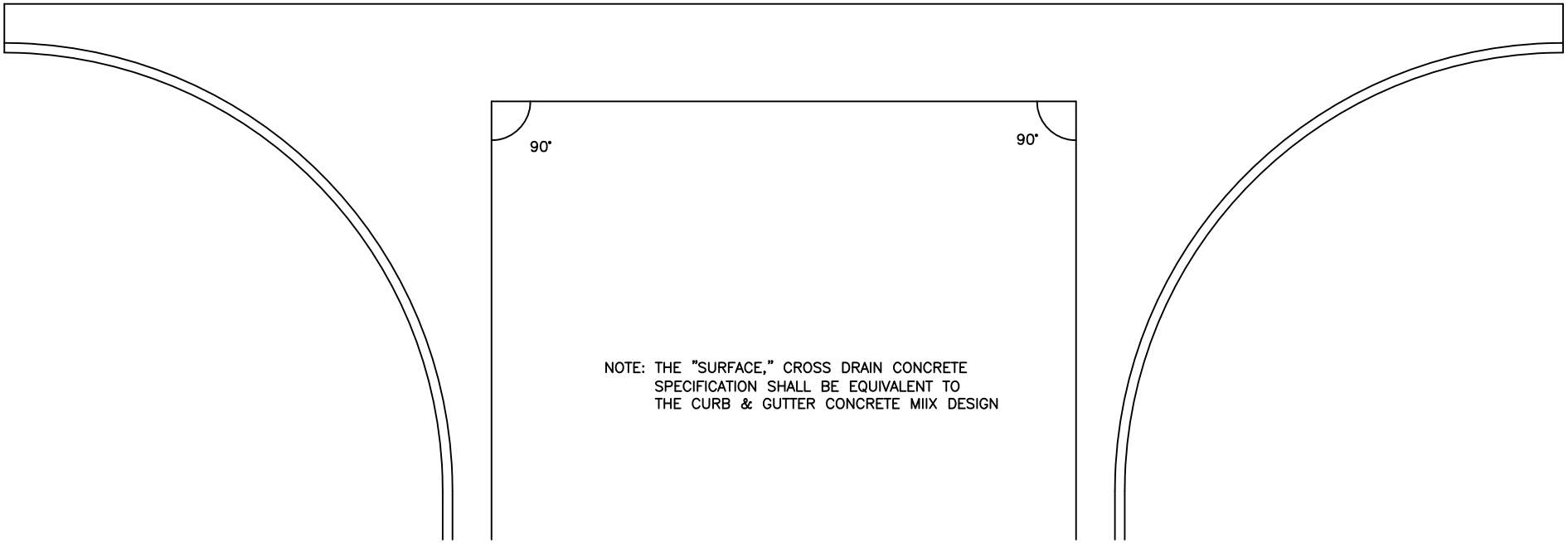

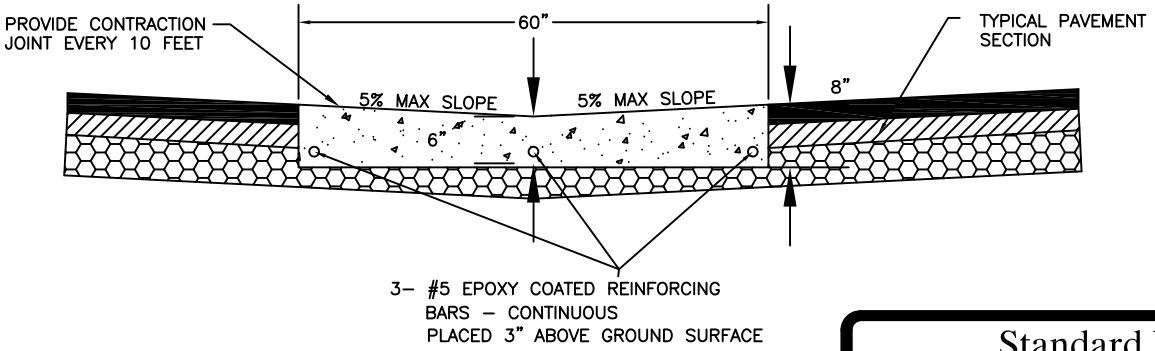

Standard Drawing Detail

NORTH LOGAN CITY
ENGINEERING DEPARTMENT
2076 NORTH 1200 EAST
NORTH LOGAN, UT 84341
(435) 752-1310

Name:	Surface "X" - Drain Section Details
Drawing Number:	A16
Date Approved:	08/16/2004
Scale:	Not to Scale
File:	C:\CITY_MAPPING\AUTOCAD\DSTMDwgs\dwg\A16_X-drain
Notes:	

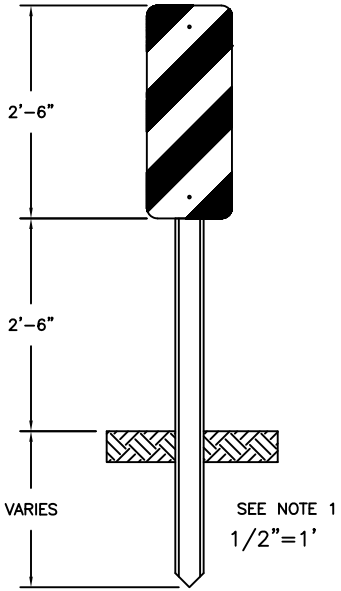

OBJECT MARKER
INSTALLATION DETAIL
I

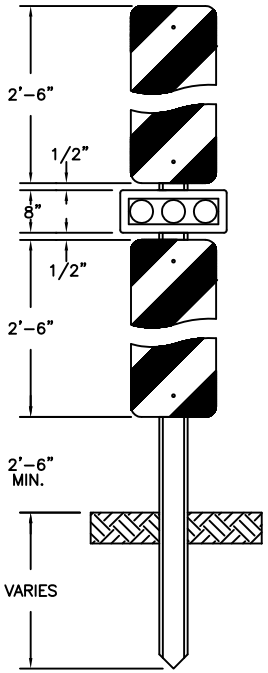

OBJECT MARKER
INSTALLATION DETAIL
II

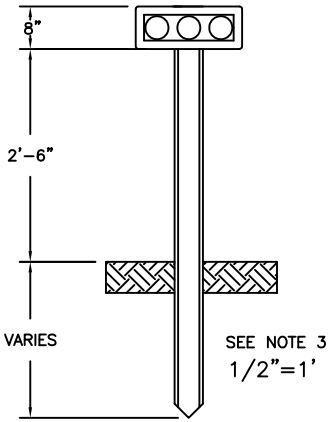

OBJECT MARKER
INSTALLATION DETAIL
III

NOTES:

1. THE OBJECT MARKER TYPE 3 IS USED TO MARK THE ENDS OF OBSTRUCTIONS SUCH AS NARROW BRIDGES. THE MARKER IS PLACED ON EACH SIDE OF BOTH ENDS OF BRIDGES ON TWO-WAY ROADWAYS, AND ON EACH SIDE OF THE APPROACH END OF BRIDGES ON ONE-WAY ROAD-WAYS. THE MARKER IS MADE OF SILVER-WHITE HIGH INTENSITY REFLECTIVE SHEETING AND BLACK NON-REFLECTIVE PAINT.
2. AN OBJECT PANEL SHALL BE USED TO MARK AN OBSTRUCTION MORE THAN 3' WIDE. (DETAIL II)
3. AN OBJECT MARKER TYPE 2 SHALL BE USED TO MARK AN OBSTRUCTION LESS THAN 3' WIDE. (DETAIL III)
4. ALL DELINEATOR REFLECTORS AND OBJECT MARKERS SHALL BE ATTACHED TO POST WITH VANDAL RESISTANT FASTENERS.
5. THE OBJECT MARKER SHALL HAVE 3 AMBER PRISMATIC REFLECTORS MOUNTED VERTICALLY. THE PLATE, IF MOUNTED HORIZONTALLY, SHALL HAVE A YELLOW NON-RELFECTIVE BACKGROUND.
6. THE OBJECT MARKER IS USED TO MARK OBSTRUCTIONS THAT ARE LOCATED WITHIN THE ROADWAY SUCH AS OFF-RAMP GORES AND CHANNELIZATION ISLANDS. (DETAIL II)

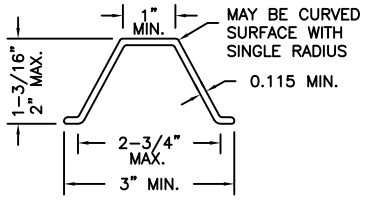

FLANGED CHANNEL POST
NOT TO SCALE

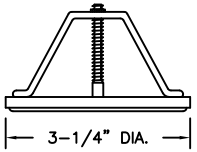

REFLECTOR ATTACHMENT IV
NOT TO SCALE

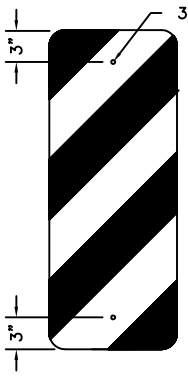

TRAFFIC PASS LEFT

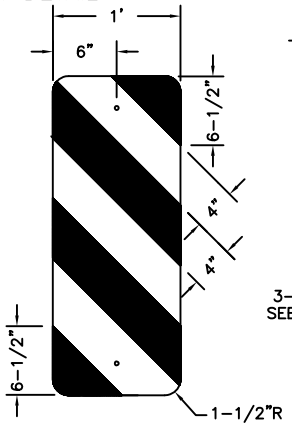

TRAFFIC PASS RIGHT

OBJECT MARKER TYPE 3
3/4"=1'
SEE NOTE 1

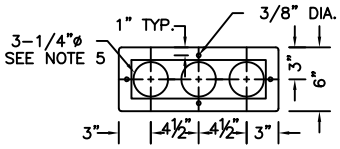

OBJECT MARKER
TYPE 2
SEE NOTE 6
3/4"=1'

OPTIONAL
TYPE 2
NOT TO SCALE

STEEL POST

Standard Drawing Detail

NORTH LOGAN CITY
ENGINEERING DEPARTMENT
2076 NORTH 1200 EAST
NORTH LOGAN, UT 84341
(435) 752-1310

Name:	**Object Markers A**
Drawing Number:	B01
Date Approved:	10/12/1995
Scale:	Not to Scale
File:	C:\CITY_MAPPING\AUTOCAD\DSTMDwgs\dwg\B01_Sign-a
Notes:	

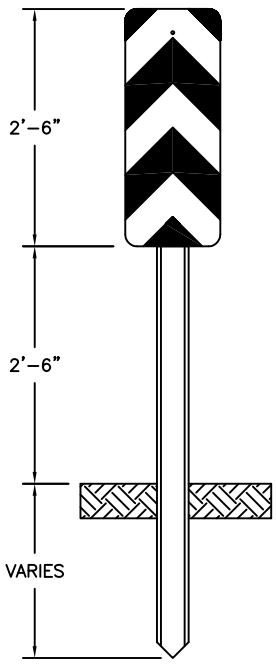

CARSONITE DELINEATOR
OR EQUAL

TYPE III OBJECT MARKER ASSEMBLY
1/2"=1'
SEE NOTE 1

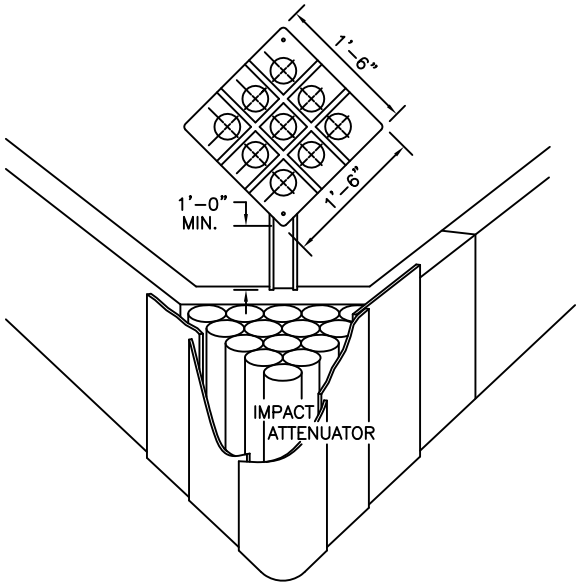

TYPE I OBJECT MARKER ASSEMBLY
NOT TO SCALE
SEE NOTE 2

NOTES:

1. THE YELLOW & BLACK TYPE III OBJECT MARKER ASSEMBLY SHALL BE PLACED AT ISLANDS DIVIDING ONE-WAY TRAFFIC AND AT OBJECTS WITHIN 12' OF THE EDGE OF PAVEMENT.
2. AN 18"x18" ALL YELLOW TYPE I OBJECT MARKER WITH 9-3¼" YELLOW PLASTIC PRISMATIC REFLECTORS SHALL BE USED TO MARK EXTREME HAZARDS LOCATED WITHIN THE ROADWAY SUCH AS OBJECTS 2 FEET OR HIGHER AT DIVIDED ROADWAYS ON STRUCTURES.

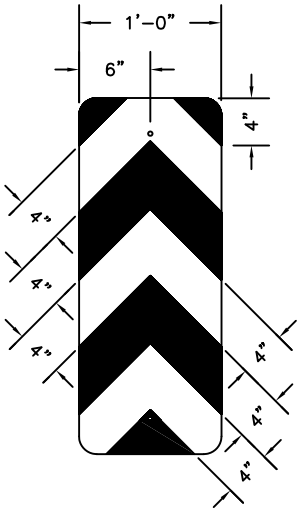

TYPE III OBJECT MARKER
3/4"=1'
SEE NOTE 1

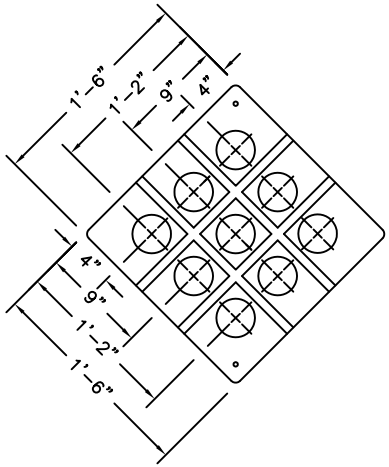

TYPE I OBJECT MARKER
3/4"=1'
SEE NOTE 2

Standard Drawing Detail

NORTH LOGAN CITY
ENGINEERING DEPARTMENT
2076 NORTH 1200 EAST
NORTH LOGAN, UT 84341
(435) 752-1310

Name:	**Object Markers B**
Drawing Number:	B02
Date Approved:	10/12/1995
Scale:	Not to Scale
File:	C:\CITY_MAPPING\AUTOCAD\DSTMDwgs\dwg\Sign_b
Notes:	

TRAFFIC SIGN DETAILS

ATTACHMENT TO 4"X4" POSTS
USING 3/8" CARRIAGE BOLTS
AND A SAFETY NUT

TYPICAL STREET SIGN DETAIL

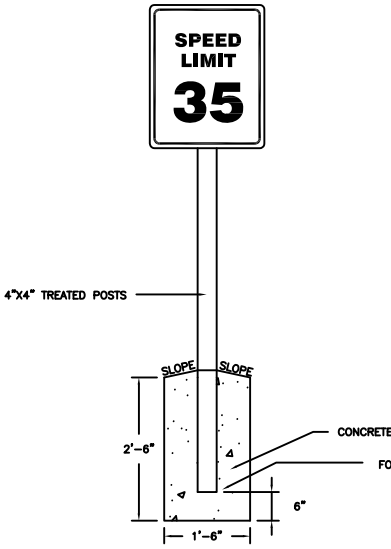

"T" INTERSECTION GUIDANCE

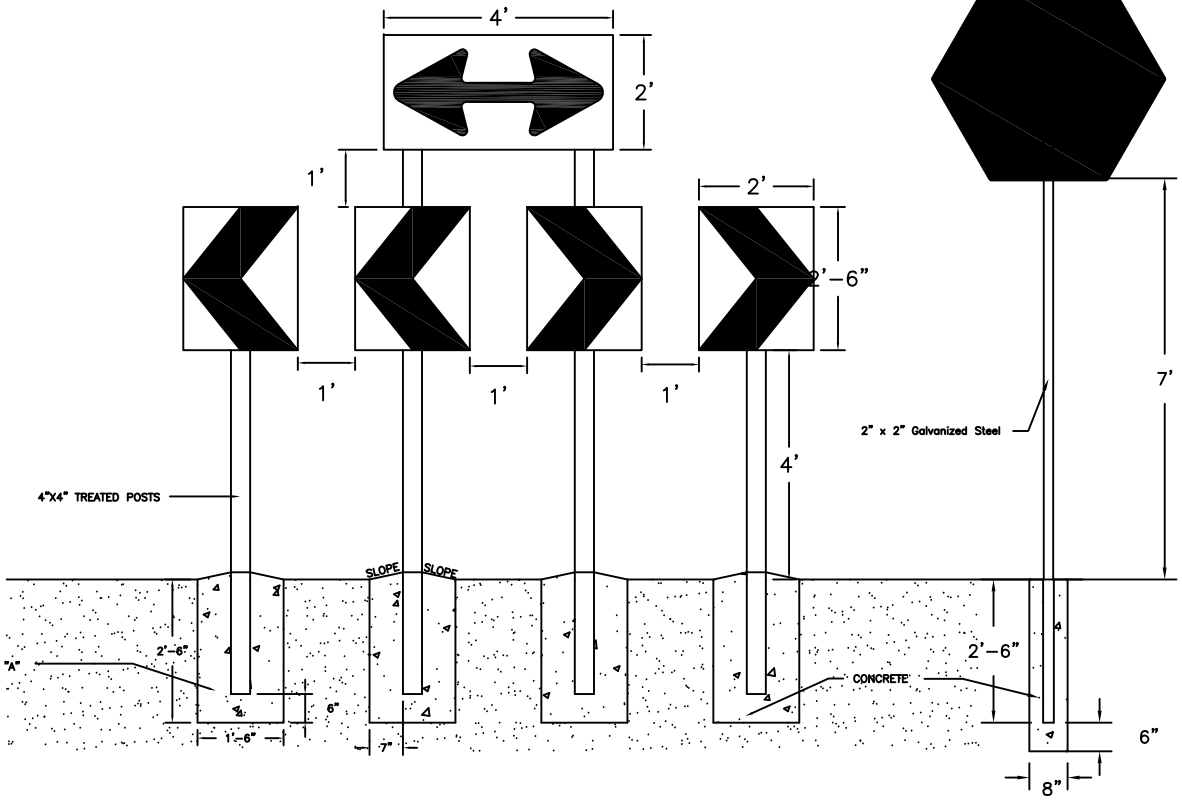

ATTACHMENT TO 2"X2" POSTS
USING 3/8" CARRIAGE BOLTS
AND A SAFETY NUT

Standard Drawing Detail

NORTH LOGAN CITY
ENGINEERING DEPARTMENT
2076 NORTH 1200 EAST
NORTH LOGAN, UT 84341
(435) 752-1310

Name:	**Traffic Sign Intersection Marker**
Drawing Number:	B03
Date Approved:	08/16/04
Scale:	Not to Scale
File:	C:\CITY_MAPPING\AUTOCAD\DSTMDwgs\dwg\B03_Sign-c
Notes:	

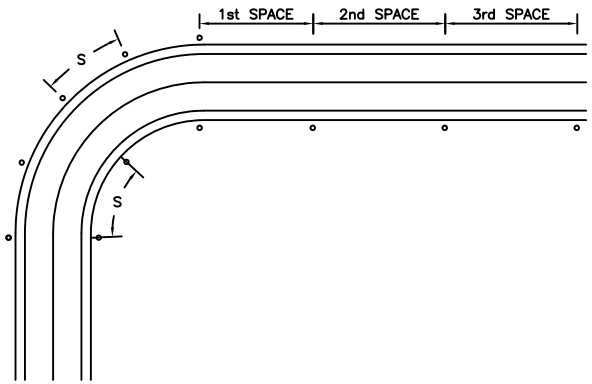

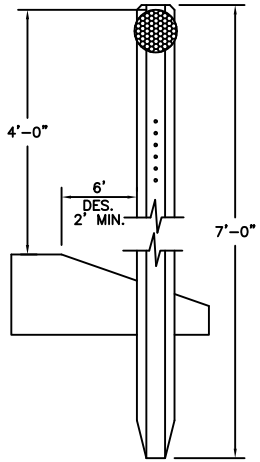

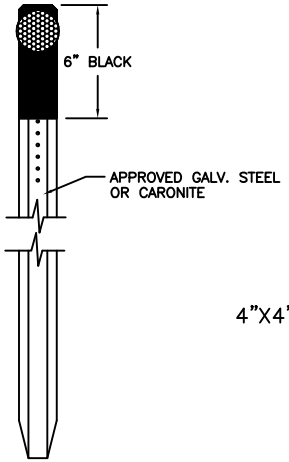

CULVERT MARKER
SEE NOTE 3

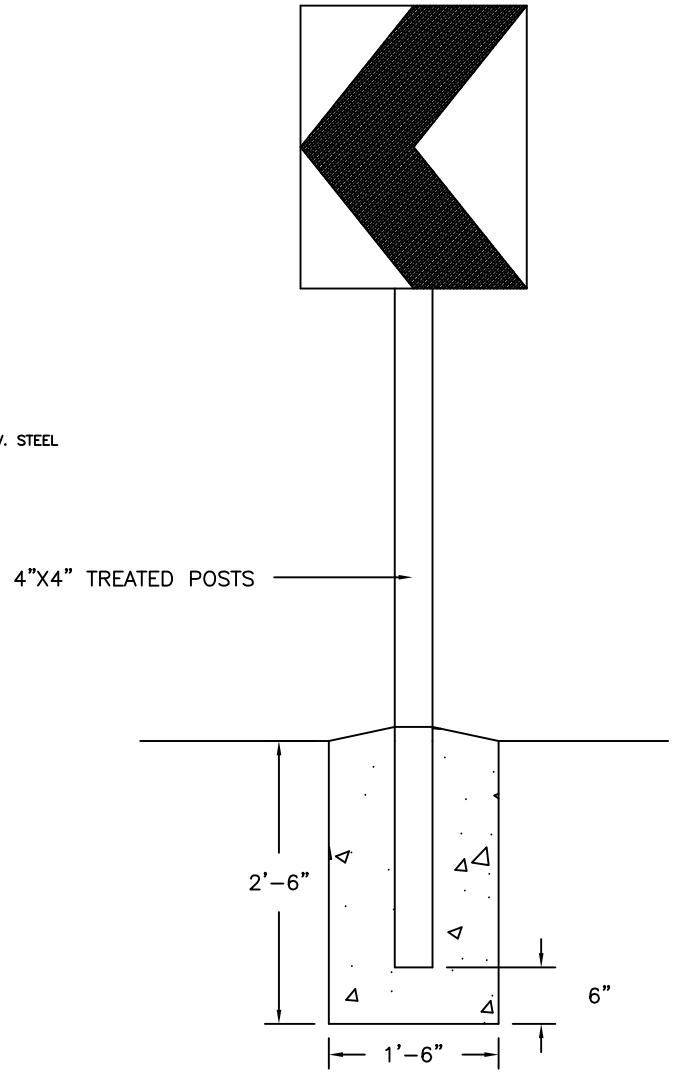

MARKER

DEGREE OF CURVE	SPACING ON CURVES (S)	SPACING IN ADV. & BEYOND CURVE		
		1st SPACE	2nd SPACE	3rd SPACE
0°30'	215	385	400	400
1°00'	150	275	400	400
1°30'	125	220	370	400
2°00'	110	190	320	400
2°30'	95	170	285	400
3°00'	85	155	255	400
3°30'	80	145	240	400
4°00'	75	135	220	400
4°30'	70	125	210	400
5°00'–5°30'	65	115	190	385
6°00'–6°30'	60	105	175	350
7°00'–7°30'	55	95	160	320
8°00'–9°00'	50	85	145	290
9°30'–11°30'	45	80	130	260
12°00'–14°00'	40	70	115	230
15°00' & GREATER	35	65	110	215

NOTES:

1. THE COLOR OF DELINEATORS, IN ALL CASES CONFORM TO THE COLOR OF EDGE LINES STIPULATED IN THE LATEST EDITION OF THE MANUAL ON UNIFORM TRAFFIC CONTROL DEVICES, MARKERS SHALL CONFORM TO THE SPECIFICATION DETAIL
2. DELINEATOR POSTS SHALL BE SET 2' – 6' FROM PAVEMENT EDGE AND SHALL MAINTAIN A STRAIGHT LINE ON TANGENT SECTIONS
3. DELINEATORS SHALL BE LOCATED AT CULVERTS. THE TOP 6" OF THE POST SHALL BE PAINTED BLACK. THE CULVERT MARKER REFLECTOR BUTTON SHALL BE OF THE SAME COLOR AS THE DELINEATORS WITH WHICH IT IS ALIGNED.
4. THERE SHALL BE A MINIMUM OF 3 DELINEATORS CONTINUOUSLY VISIBLE ON HORIZONTAL CURVES AND THE CREST OF VERTICAL CURVES. WHEN 3 DELINEATORS ARE NOT VISIBLE INSTALL ADDITIONAL DELINEATORS AT THE MIDPOINTS BETWEEN THE NORMALLY SPACED DELINEATORS. IF 3 DELINEATORS ARE STILL NOT VISIBLE, INSTALL ADDITIONAL DELINEATORS AT THE QUARTER POINTS OR SMALLER INCREMENTS BETWEEN THE NORMALLY SPACED DELINIATORS UNTIL 3 DELINEATORS BECOME CONTINUOUSLY VISIBLE.

Standard Drawing Detail

NORTH LOGAN CITY
ENGINEERING DEPARTMENT
2076 NORTH 1200 EAST
NORTH LOGAN, UT 84341
(435) 752-1310

Name: **Delineation**
Drawing Number: B04
Date Approved: 08/16/2004
Scale: Not to Scale
File: C:\CITY_MAPPING\AUTOCAD\DSTMDwgs\dwg\B04_Sign-cul
Notes:

SANITARY SEWER MANHOLE

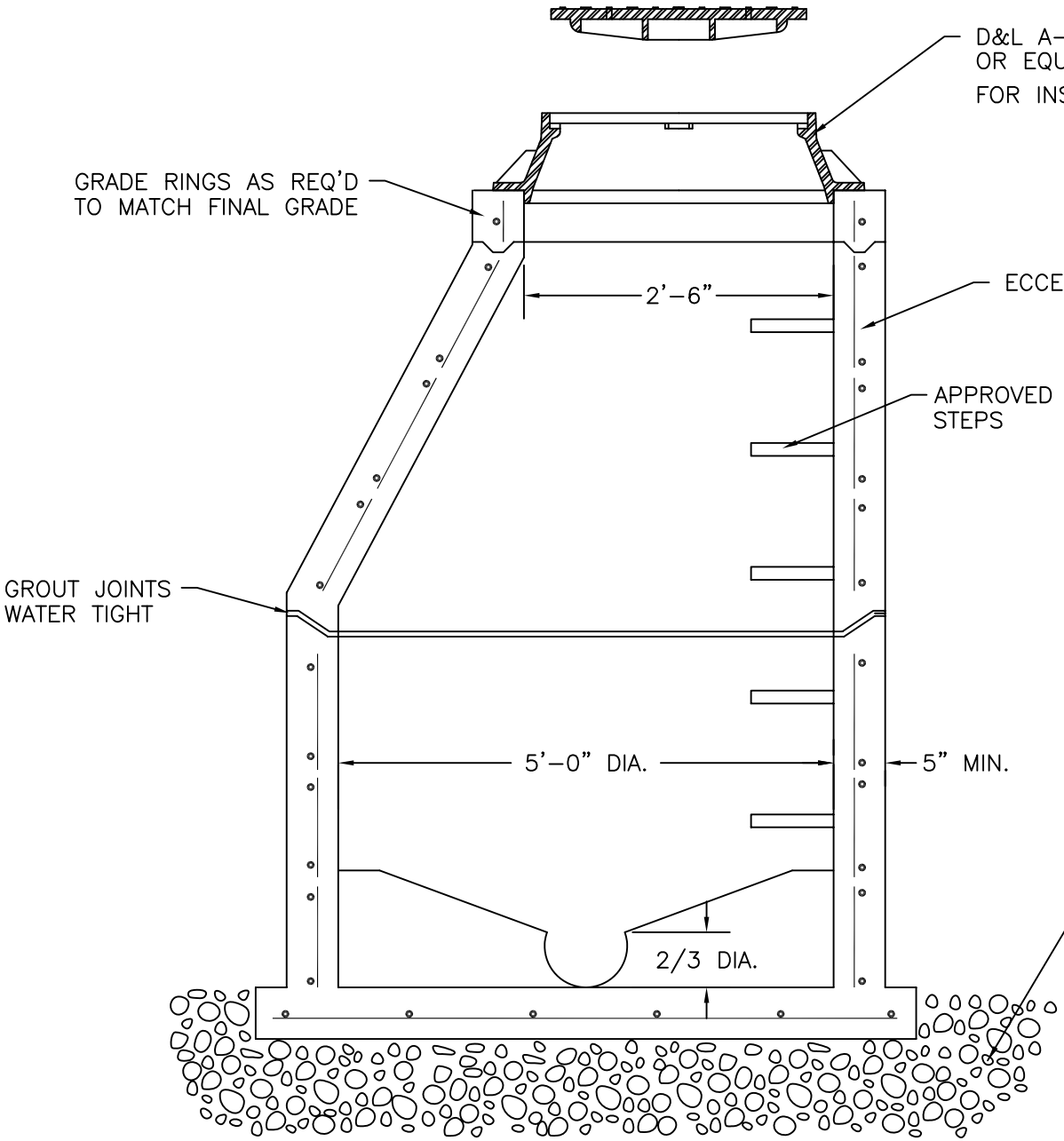

NOTE:

1. RING AND COVER ARE TO MATCH FINAL GRADE EVEN IF AT AN ANGLE, AND CROSS SLOPE
2. MANHOLE AND CONE SECTIONS ARE TO REMAIN LEVEL.
3. SEE ALSO MANHOLE 2 (DWG. NO C2)

Standard Drawing Detail

NORTH LOGAN CITY
ENGINEERING DEPARTMENT
2076 NORTH 1200 EAST
NORTH LOGAN, UT 84341
(435) 752-1310

Name:	**Sewer Manhole**
Drawing Number:	C1
Date Approved:	08/26/1996
Scale:	Not to Scale
File:	C:\CITY_MAPPING\AUTOCAD\DSTMDwgs\dwg\C01_Manhole
Notes:	

ANGLE AND CROSS SLOPE

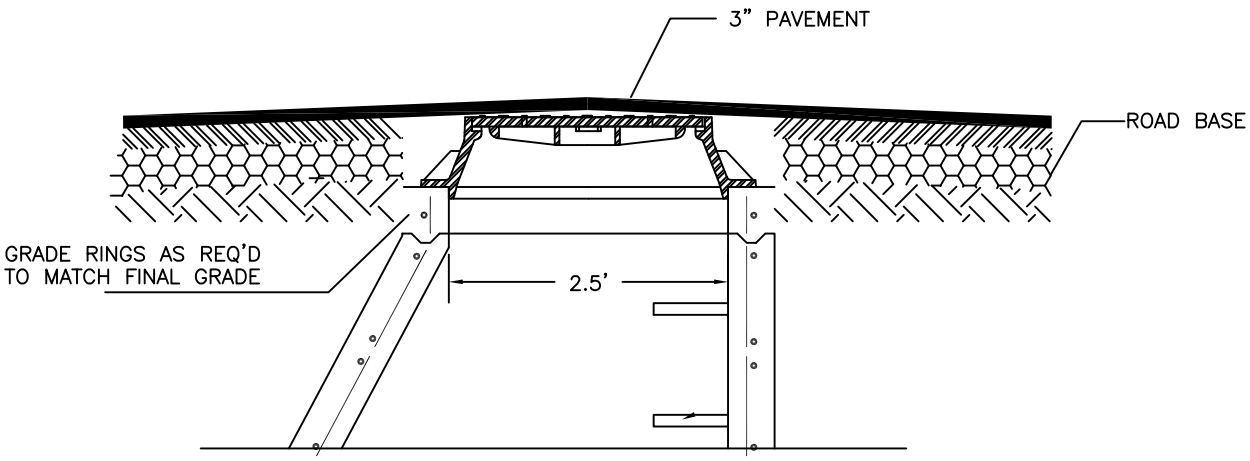

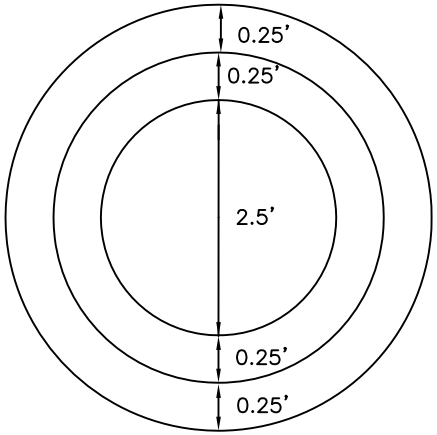

NOTE:

ORIGINAL POSITIOIN OF MANHOLE SHALL FALL BELOW ASPHALT GRADE. (3 INCHES NORMAL)

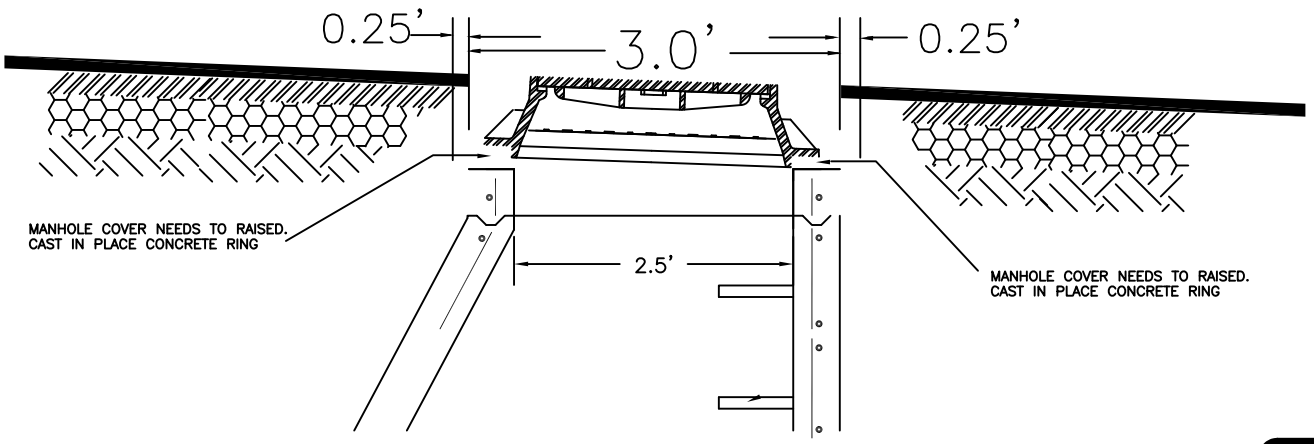

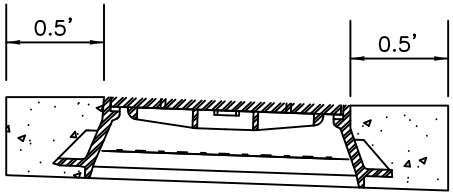

PROCEDURE:

ASPHALT SHALL BE CUT AT A 3.5' RADIUS AROUND SEWER MANHOLE.
RING AND COVER SHALL THEN BE RAISED AND BLOCKED AS SHOWN.
FLOWLINE, RING AND COVER ARE TO FALL 0.5" BELOW FINAL GRADE EVEN IF AT AN ANGLE.
MANHOLE AND CONE SECTIONS ARE TO REMAIN LEVEL.
CAST IN PLACE A MINIMUM THICKNESS OF 6 INCHES CLASS AA_AE CONCRETE RING TO SECURE ADJUSTMENT.

Standard Drawing Detail

NORTH LOGAN CITY
ENGINEERING DEPARTMENT
2076 NORTH 1200 EAST
NORTH LOGAN, UT 84341
(435) 752-1310

Name:	**Sewer Manhole**
Drawing Number:	C02
Date Approved:	08/16/2004
Scale:	Not to Scale
File:	C:\CITY_MAPPING\AUTOCAD\DSTMDwgs\dwg\C02_Smh-cutout
Notes:	

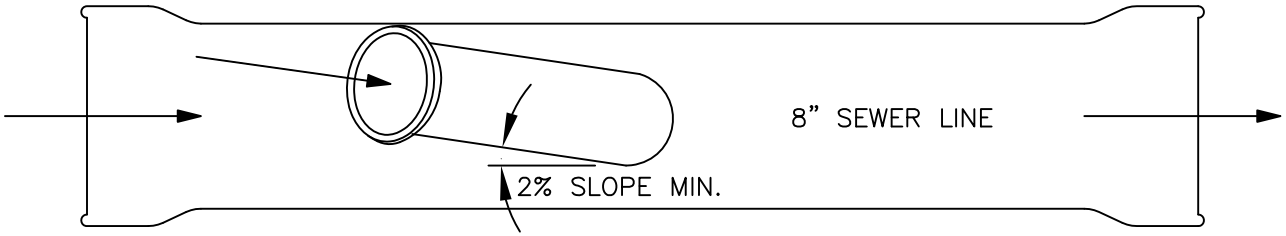

SIDE VIEW

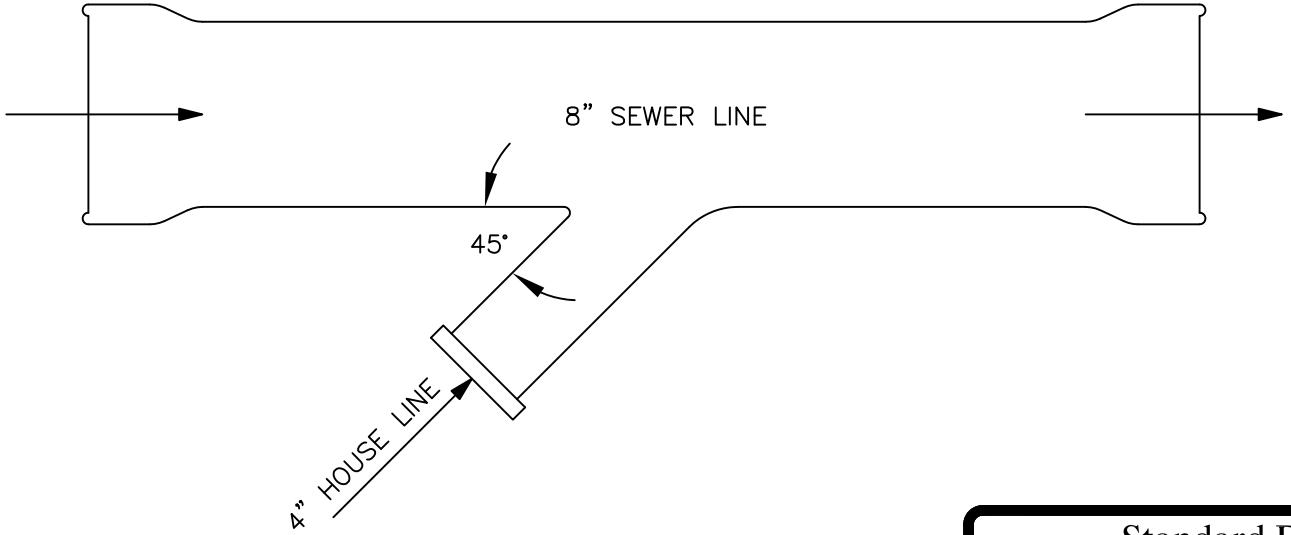

PLAN (TOP) VIEW

Standard Drawing Detail

NORTH LOGAN CITY
ENGINEERING DEPARTMENT
2076 NORTH 1200 EAST
NORTH LOGAN, UT 84341
(435) 752-1310

Name:	**Typical Sewer Service Connection**
Drawing Number:	C03
Date Approved:	02/07/1996
Scale:	Not to Scale
File:	C:\CITY_MAPPING\AUTOCAD\DSTMDwgs\dwg\C03_Sewer
Notes:	

DUPLEX SEWAGE EJECTOR SYSTEM

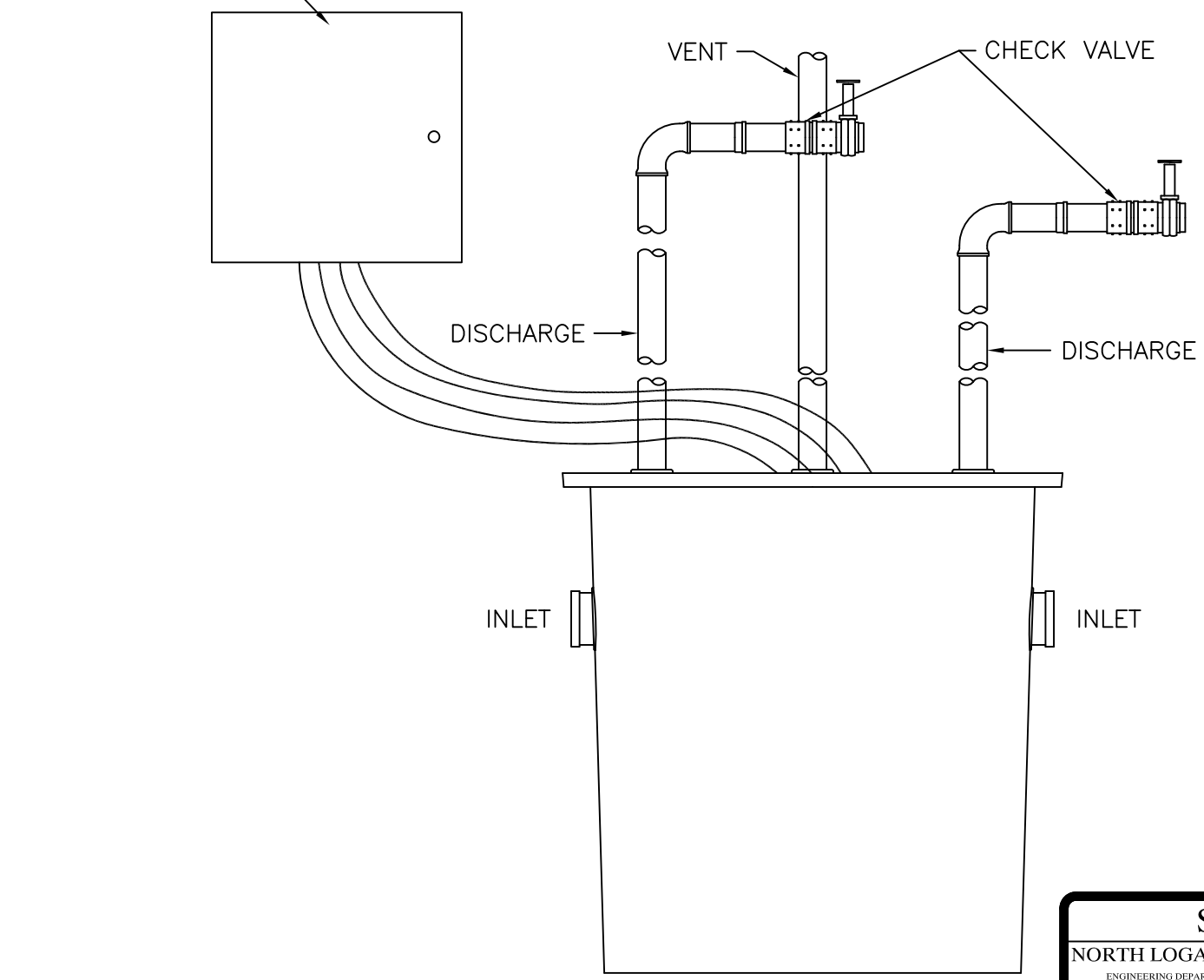

Standard Drawing Detail

NORTH LOGAN CITY
ENGINEERING DEPARTMENT
2076 NORTH 1200 EAST
NORTH LOGAN, UT 84341
(435) 752-1310

Name:	**Duplex Sewage Ejector System**
Drawing Number:	C04
Date Approved:	12/22/1995
Scale:	Not to Scale
File:	C:\CITY_MAPPING\AUTOCAD\DSTMDwgs\dwg\C04_Sew-Ejec
Notes:	

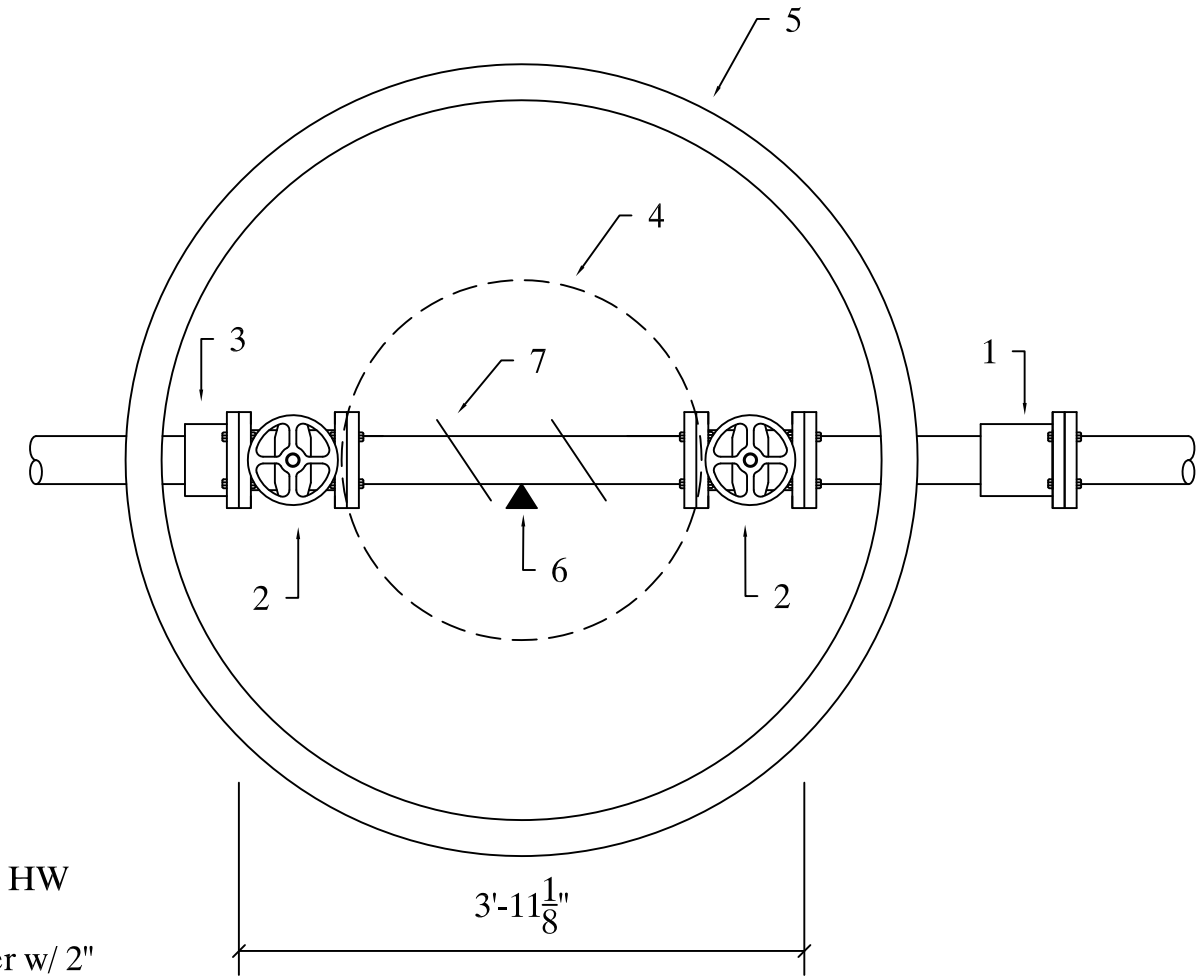

1. 4" MT Sleeve
2. 4" RSGV Flg w/ HW
3. 3" FCA
4. 30" R & C Water w/ 2" hole meter vault only
5. 5' dia M.H. / or vault
6. 4" Pipe Supports adj.
7. 4" Double Check w/ values Watts 770 or equivalent

Standard Drawing Detail

NORTH LOGAN CITY
ENGINEERING DEPARTMENT
2076 NORTH 1200 EAST
NORTH LOGAN, UT 84341
(435) 752-1310

Name:	**Manhole**
Drawing Number:	D01
Date Approved:	03/14/2001
Scale:	Not to Scale
File:	C:\CITY_MAPPING\AUTOCAD\DSTMDwgs\dwg\D01_4and3 Meter Sta
Notes:	

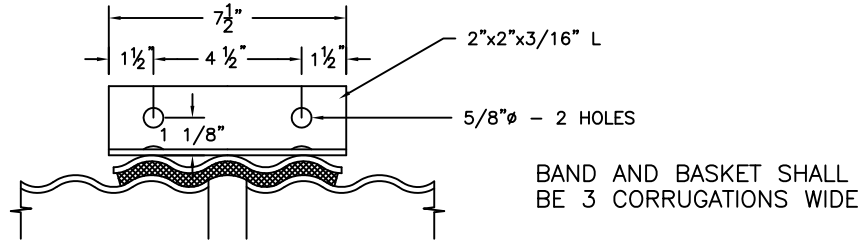

BAND AND BASKET SHALL
BE 3 CORRUGATIONS WIDE

8"–30" DIA. INCLUSIVE

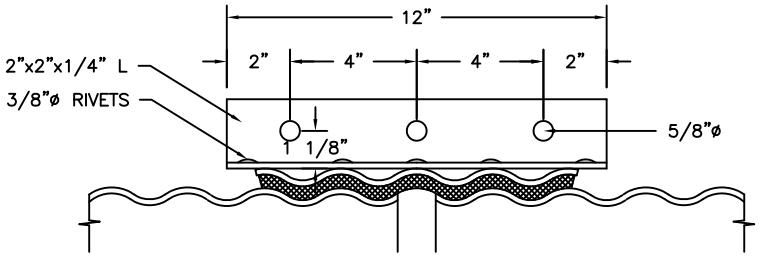

BAND AND BASKET SHALL
BE 5 CORRUGATIONS WIDE

36"–84" DIA. INCLUSIVE

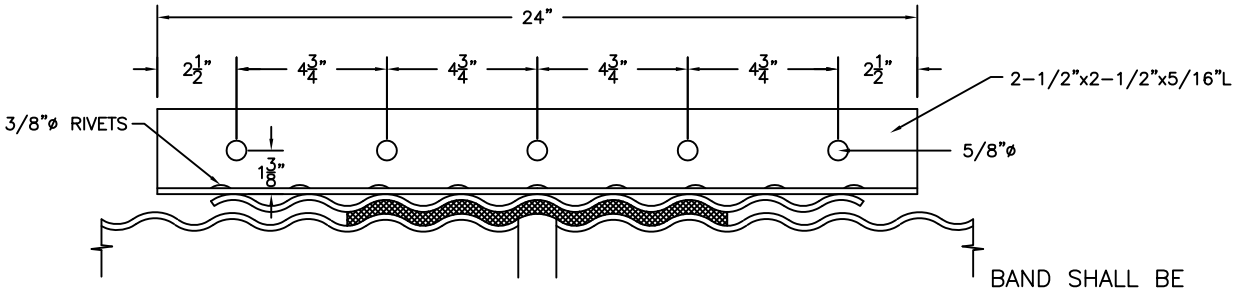

BAND SHALL BE
9 CORRUGATIONS WIDE
GASKET SHALL BE 5
CORRUGATIONS WIDE.

66"–84" DIA. INCLUSIVE

Standard Drawing Detail

NORTH LOGAN CITY
ENGINEERING DEPARTMENT
2076 NORTH 1200 EAST
NORTH LOGAN, UT 84341
(435) 752-1310

Name:	**Watertight Connection Bands for C.M.P. Pipe**
Drawing Number:	D03
Date Approved:	03/21/1996
Scale:	Not to Scale
File:	C:\CITY_MAPPING\AUTOCAD\DSTMDwgs\dwg\D02_CMP-CON
Notes:	

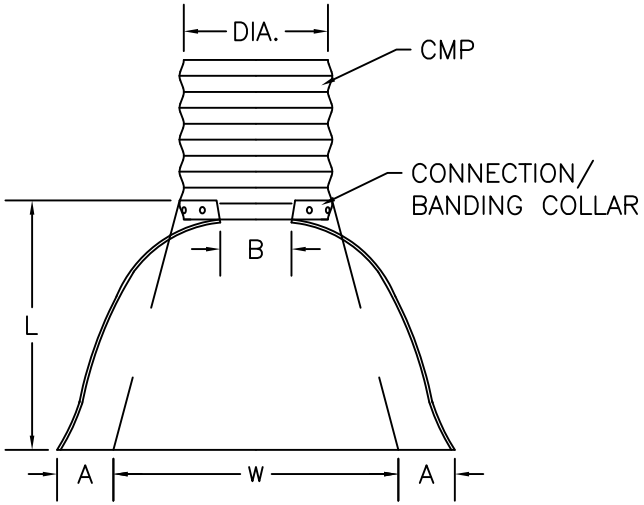

PLAN

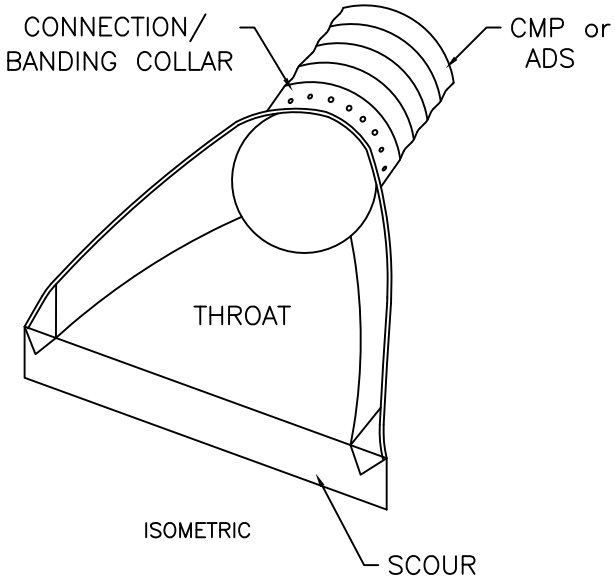

ISOMETRIC

PIPE DIA.	WT.	GAGE	END SECTION DIMENSIONS					
			A	B	H	L	W	TOE PLATE
12	29#	16	4¾"	6"	6"	21"	24"	34"
15	39	16	6	8	6	26	30	40
18	52	16	7	9	6	31	36	46
21	63	16	8¼"	11	6	36	42	52
24	90	16	9½"	12	6	42	48	58
30	145	14	12	15	7½"	52½"	60	70
36	274	14	14	18	9	63	72	85
42	417	12	16	21	10½"	73½"	84	103
48	502	12	18	27	12	78	90	114
54	630	12	18	30	12	84	102	130
60	826	12	18	33	12	87	114	146
66	914	12	18	36	12	87	120	162
72	998	12	18	39	12	87	126	178
78	1108	12	18	42	12	87	132	194
84	1200	12	18	45	12	87	138	210
TOLERANCE			1"	MAX.	1"	1½"	2"	

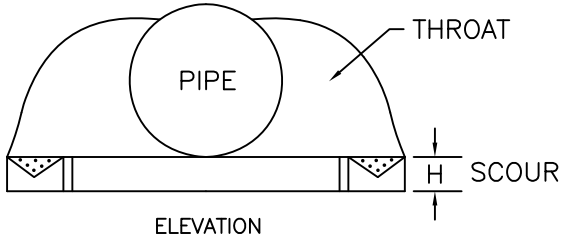

ELEVATION

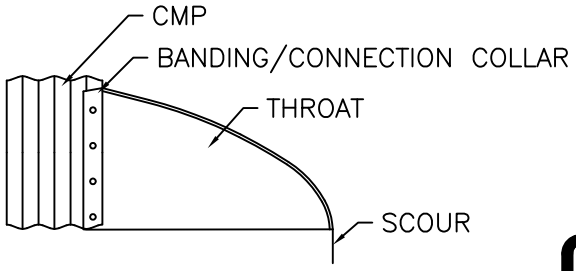

TYPICAL SECTION

Standard Drawing Detail

NORTH LOGAN CITY
ENGINEERING DEPARTMENT
2076 NORTH 1200 EAST
NORTH LOGAN, UT 84341
(435) 752-1310

Name: **Metal Culvert End Sections**

Drawing Number: D04

Date Approved: 10/12/1995

Scale: Not to Scale

File: C:\CITY_MAPPING\AUTOCAD\DSTMDwgs\dwg\D03_Culv-end

Notes:

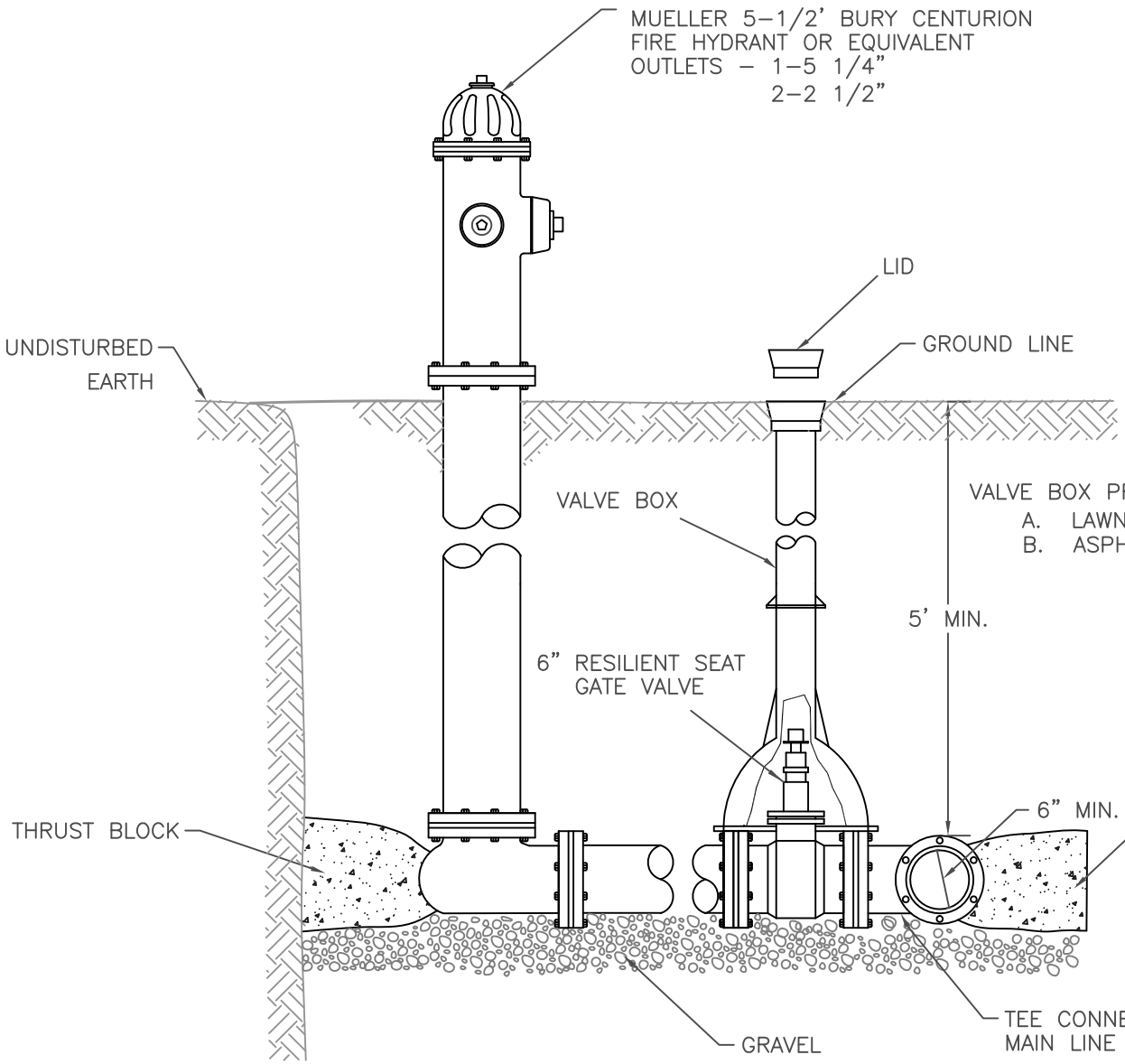

NOTES:

1. THIS MUST BE IN COMPIANCE WITH THE APPLICABLE FIRE DISTRICT STANDARD FIRE HYDRANT.
2. ALL FIRE HYDRANTS WILL STAND PLUMB WITH THE PUMPER NOZZLE FACING THE STREET.
3. HYDRANT STANDARD LOCATION IS BETWEEN SIDEWALK AND CURB & GUTTER.

VALVE BOX PROCEDURE AT GRADE

A. LAWN AREA: FLUSH WITH SOD ELEVATION
B. ASPHALT AREA: CUT 24" DIAMETER RING AROUND LID OUT OF ASPHALT, RING AND COVER SHALL BE LIFTED TO BE 0.05' BELOW GRADE. FILL 18" RING WITH CONCRETE AT A MINIMUM DEPTH OF 6".

Standard Drawing Detail

NORTH LOGAN CITY
ENGINEERING DEPARTMENT
2076 NORTH 1200 EAST
NORTH LOGAN, UT 84341
(435) 752-1310

Name:	**Fire Hydrant**
Drawing Number:	D05
Date Approved:	10/12/1995
Scale:	Not to Scale
File:	C:\CITY_MAPPING\AUTOCAD\DSTMDwgs\dwg\D04_Firehyd
Notes:	Date Modified 1/10/2014

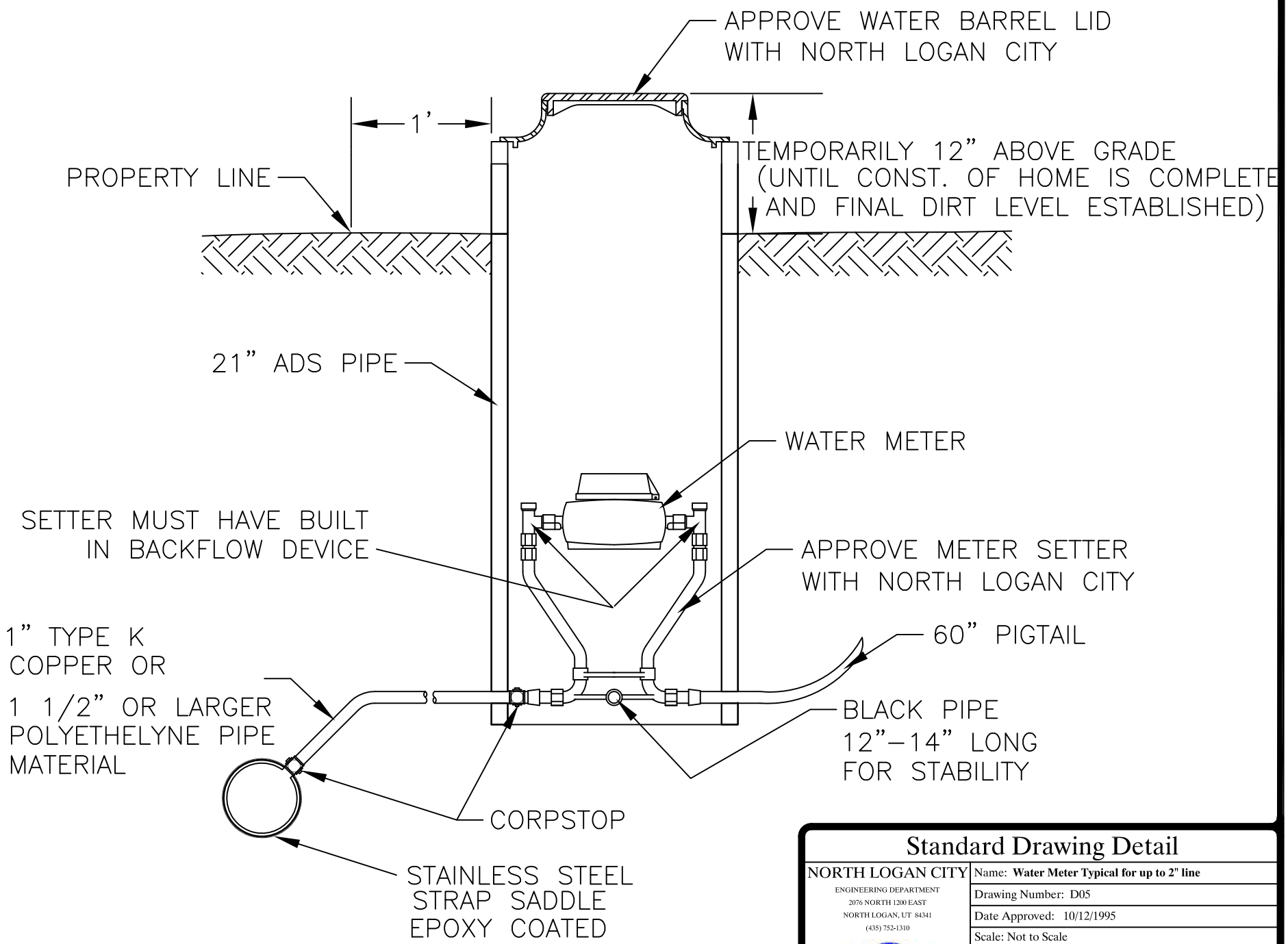

Standard Drawing Detail

NORTH LOGAN CITY
ENGINEERING DEPARTMENT
2076 NORTH 1200 EAST
NORTH LOGAN, UT 84341
(435) 752-1310

Name:	**Water Meter Typical for up to 2" line**
Drawing Number:	D05
Date Approved:	10/12/1995
Scale:	Not to Scale
File:	C:\CITY_MAPPING\AUTOCAD\DSTMDwgs\dwg\D05_Meter
Notes:	

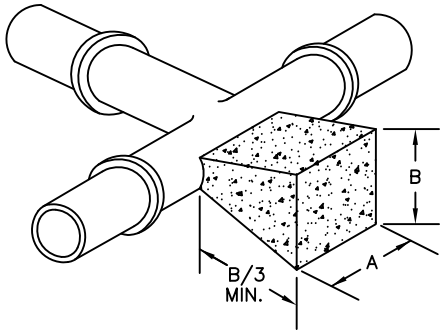

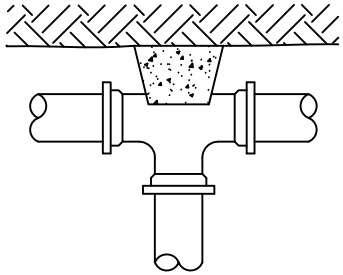

TEE

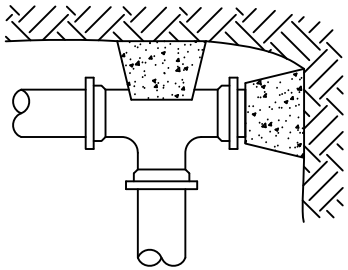

TEE (PLUGGED)

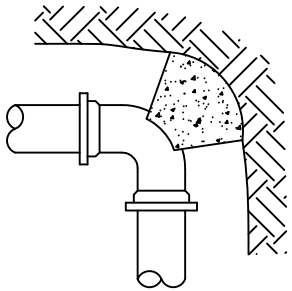

BEND

DIMENSIONS FOR THRUST BLOCKING								
FITTING SIZES	TEES and PLUGS		90° BENDS		45° BENDS		22-1/2° BENDS	
	A	B	A	B	A	B	A	B
4"	1'-6"	0'-6"	1'-6"	0'-9"	1'-3"	0'-6"	1'-0"	0'-6"
6"	2'-0"	0'-9"	2'-0"	1'-0"	1'-3"	0'-9"	1'-0"	0'-9"
8"	2'-0"	1'-0"	2'-3"	1'-3"	1'-6"	1'-0"	1'-0"	1'-0"
10"	2'-6"	1'-3"	2'-9"	1'-6"	1'-9"	1'-3"	1'-3"	1'-0"
12"	2'-3"	1'-9"	3'-3"	1'-9"	2'-0"	1'-6"	1'-6"	1'-3"
14"	2'-6"	1'-9"	3'-3"	2'-3"	2'-3"	1'-9"	1'-9"	1'-3"
16"	3'-6"	2'-0"	4'-3"	2'-3"	3'-0"	1'-9"	1'-9"	1'-6"
18"	3'-9"	2'-3"	4'-9"	2'-6"	3'-0"	2'-3"	2'-3"	1'-6"
20"	4'-0"	2'-6"	4'-9"	3'-0"	3'-6"	2'-3"	2'-3"	1'-9"
24"	4'-9"	3'-0"	5'-9"	3'-6"	4'-0"	2'-9"	2'-9"	2'-0"

NOTES

1. This table is based on 150 p.s.i. main pressure and 4000 p.s.f. soil bearing pressure. Adjust bearing areas in accordance with soil conditions and pressures encountered.
2. For asbestos cement pipe greater than 6 inches in diameter, double the area required in the table.
3. Use 6 mil visqueen between concrete and pipe.
4. Refer to concrete standard specifications.
5. The "Thrust Blocking Details" in no way limits the location or size of additional blocking when so warranted or required by the City Engineer.

Standard Drawing Detail

NORTH LOGAN CITY
ENGINEERING DEPARTMENT
2076 NORTH 1200 EAST
NORTH LOGAN, UT 84341
(435) 752-1310

Name: **Thrust Block**

Drawing Number: D06

Date Approved: 10/12/1995

Scale: Not to Scale

File: C:\CITY_MAPPING\AUTOCAD\DSTMDwgs\dwg\D06_Thrust

Notes:

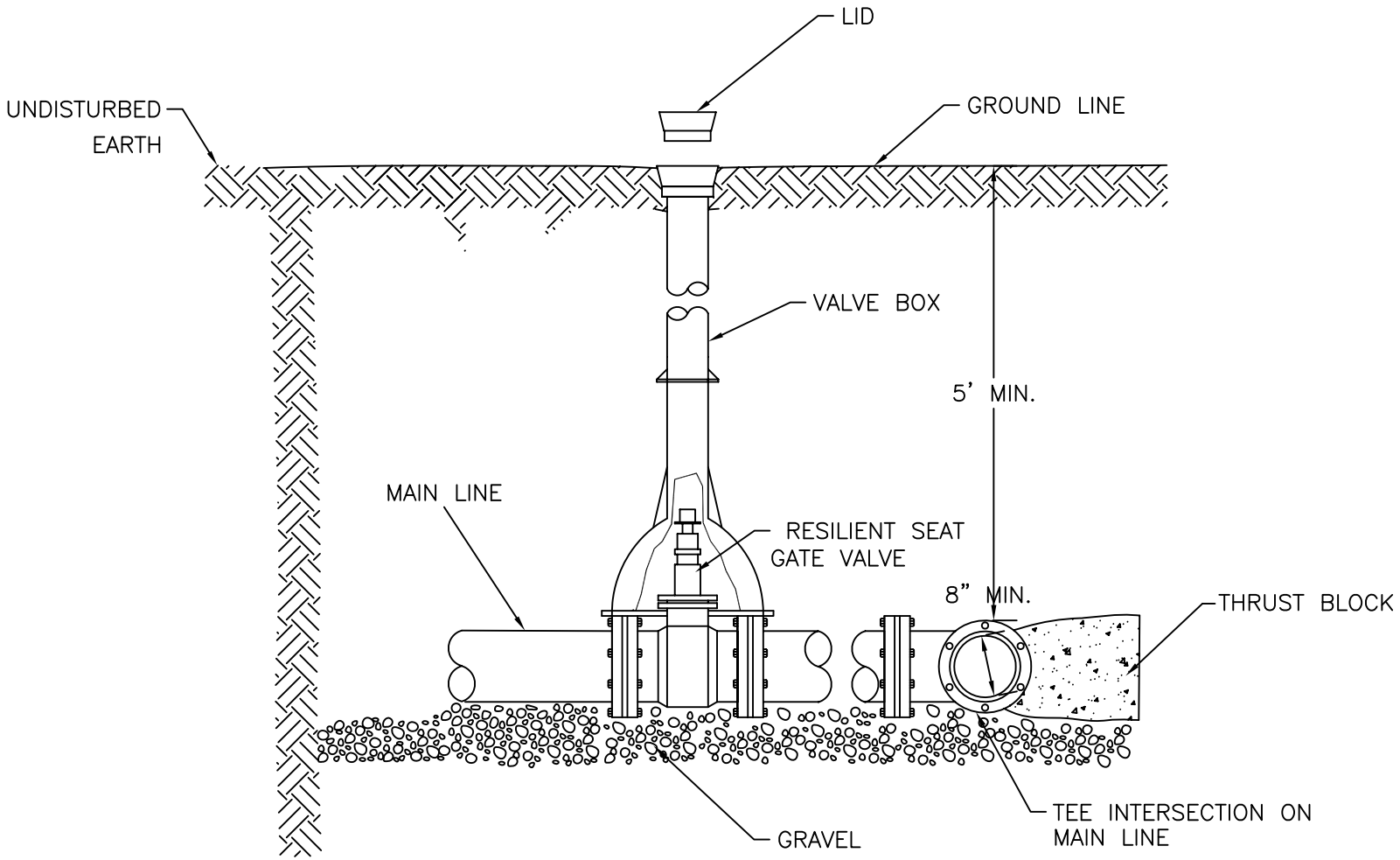

Standard Drawing Detail

NORTH LOGAN CITY
ENGINEERING DEPARTMENT
2076 NORTH 1200 EAST
NORTH LOGAN, UT 84341
(435) 752-1310

Name:	**Water Valve**
Drawing Number:	D07
Date Approved:	10/12/1995
Scale:	Not to Scale
File:	C:\CITY_MAPPING\AUTOCAD\DSTMDwgs\dwg\D07_watervalve
Notes:	

WATER VALVE CUTOUT

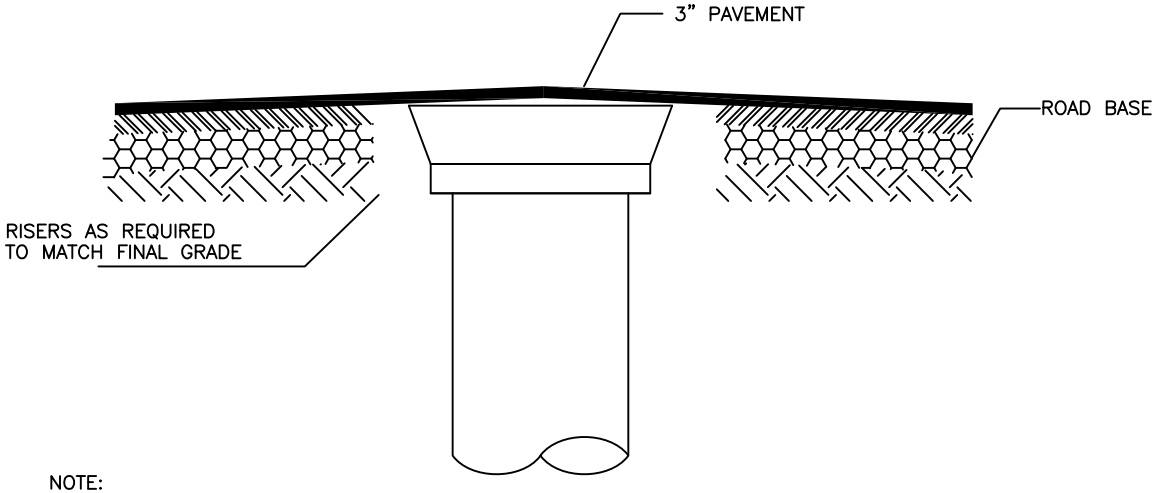

NOTE:

ORIGINAL POSITIOIN OF VALVE SHALL FALL BELOW ASPHALT GRADE. (3 INCHES NORMAL)

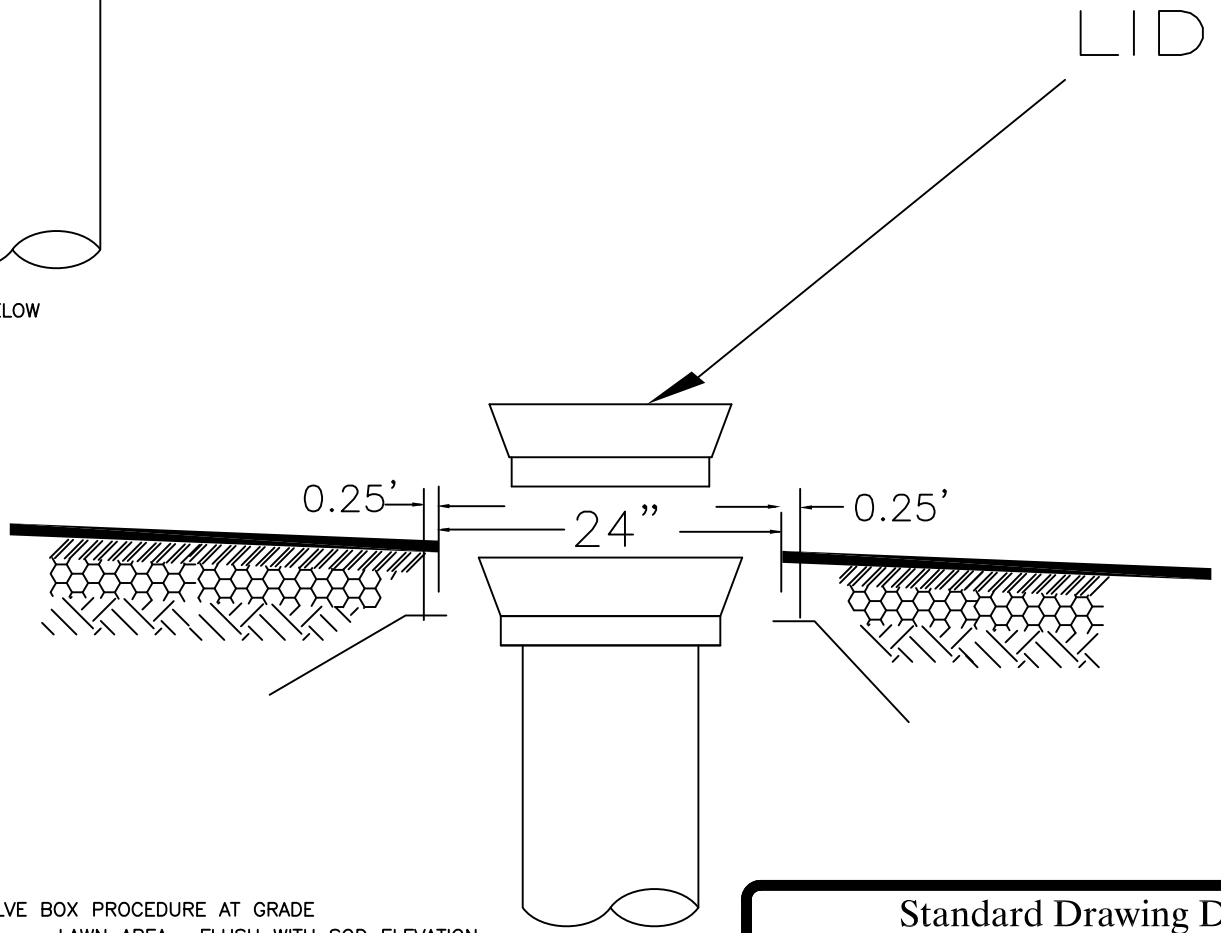

VALVE BOX PROCEDURE AT GRADE

a. LAWN AREA: FLUSH WITH SOD ELEVATION

b. ALPHALT AREA: CUT 24" DIAMETER RING AROUND LID OUT OF ASPHALT. RING AND COVER SHALL BE LIFTED TO BE 0.05' BELOW GRADE. FILL 18" RING WITH CONCRETE AT A MINMUM DEPTH OF 6".

Standard Drawing Detail

NORTH LOGAN CITY
ENGINEERING DEPARTMENT
2076 NORTH 1200 EAST
NORTH LOGAN, UT 84341
(435) 752-1310

Name:	**Water Valve Cutout**
Drawing Number:	D08
Date Approved:	08/26/1996
Scale:	Not to Scale
File:	C:\CITY_MAPPING\AUTOCAD\DSTMDwgs\dwg\D08_Wv-cutou
Notes:	

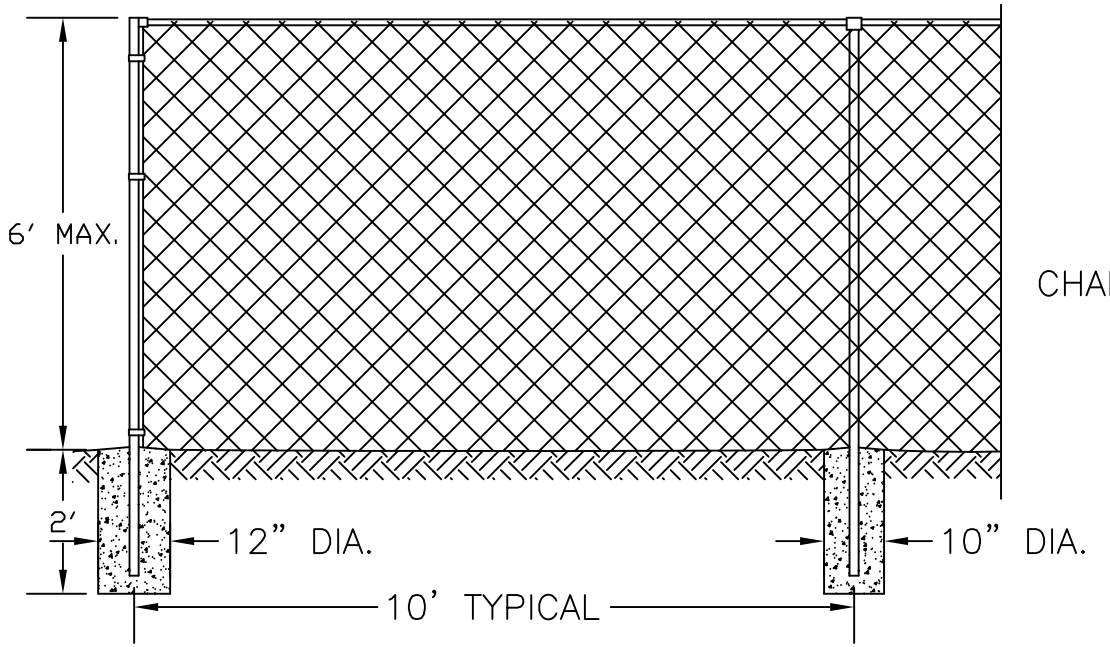

CHAIN LINK FENCE

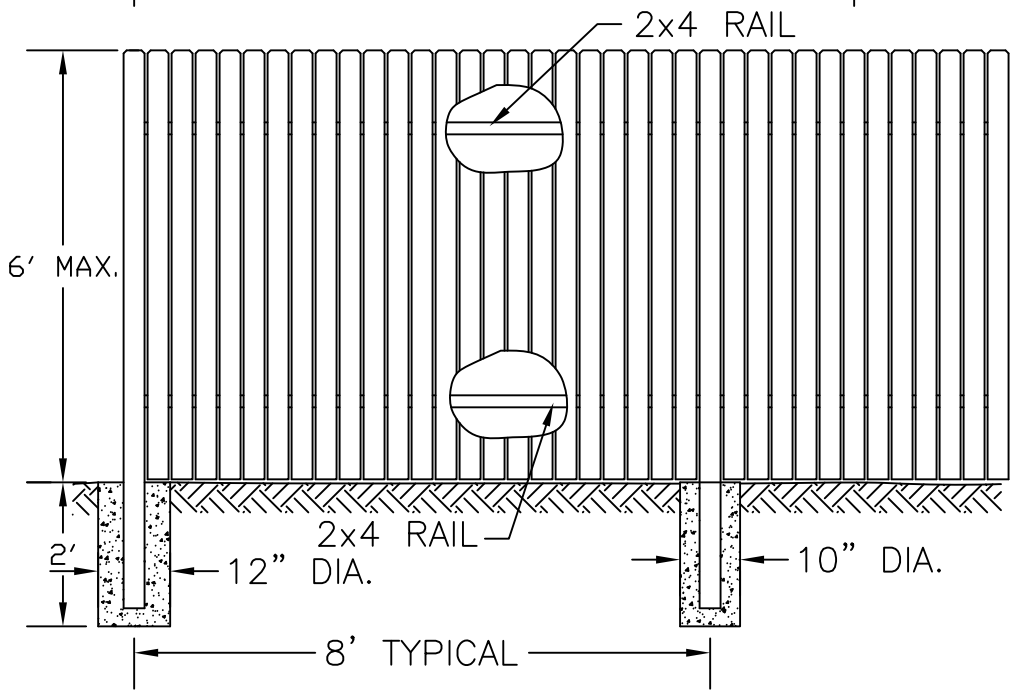

WOOD FENCE

NOTES

1. No fence shall be erected in any front, rear or side yard in excess of six feet. (Ord. 12C–108)

Standard Drawing Detail

NORTH LOGAN CITY
ENGINEERING DEPARTMENT
2076 NORTH 1200 EAST
NORTH LOGAN, UT 84341
(435) 752-1310

Name:	**Fence Detail**
Drawing Number:	M01
Date Approved:	10/12/1995
Scale:	Not to Scale
File:	C:\CITY_MAPPING\AUTOCAD\DSTMDwgs\dwg\M01_Fence
Notes:	

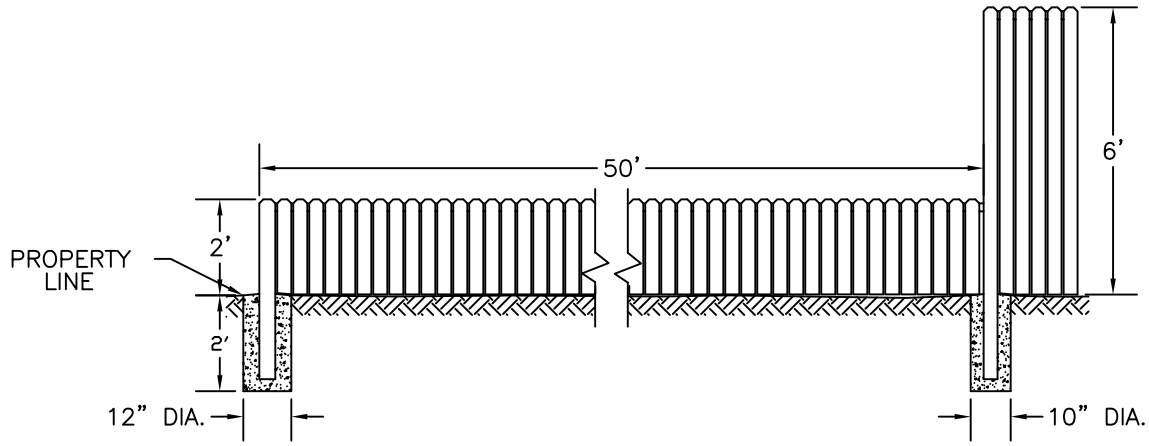

1/4"=1'

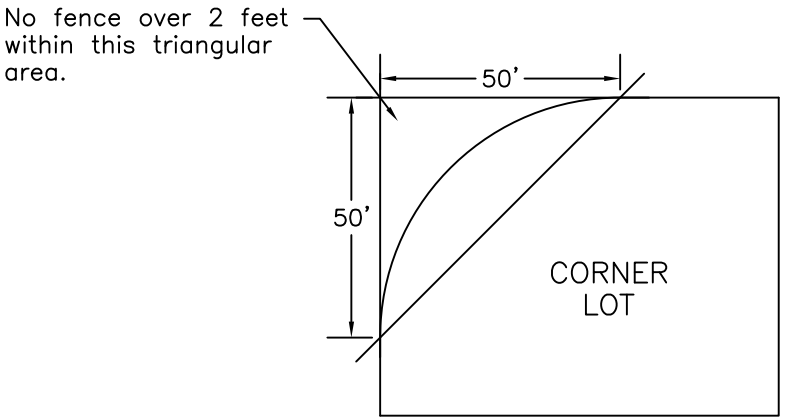

NO SCALE

NOTES:

1. No fence or wall or similar structure shall be erected in any required front, rear or side yard to a height in excess of six (6) feet except for accessory buildings and structures permitted herein. (Ord. 12C–108)

2. In all zones which require a front yard, no obstruction to view in excess of two (2) feet in height shall be placed on any corner lot within a triangular area formed by the two lines along a public or private right–of–way as measured from the intersection of the curb (or where a curb would be located if there were a curb) to a distance along each street fifty (50) feet from the intersection and connected across the property on the corner to form a triangle except a reasonable number of trees pruned hight enough to permit unobstructed vision to automobile drivers. (Ord. 12c–112)

Standard Drawing Detail

NORTH LOGAN CITY
ENGINEERING DEPARTMENT
2076 NORTH 1200 EAST
NORTH LOGAN, UT 84341
(435) 752-1310

Name:	**Fence at Intersections**
Drawing Number:	M02
Date Approved:	10/12/1995
Scale:	Not to Scale
File:	C:\CITY_MAPPING\AUTOCAD\DSTMDwgs\dwg\M02_Fence-in
Notes:	

JUNCTION BOX DETAIL

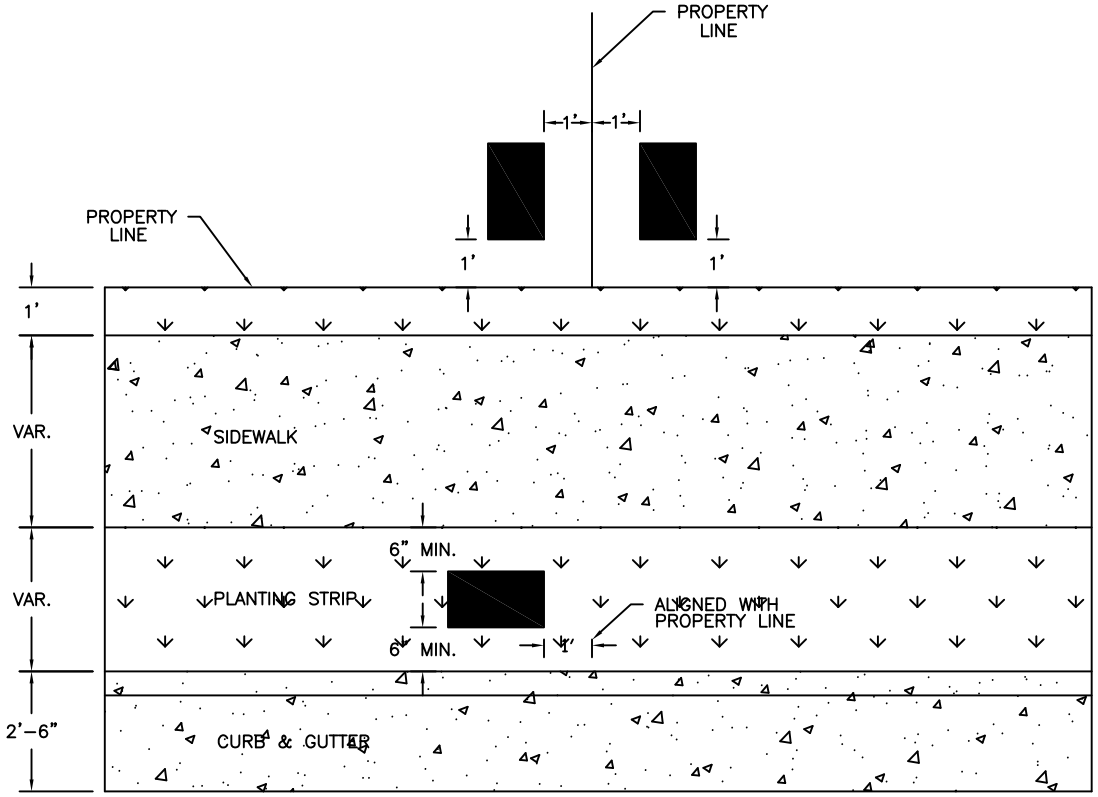

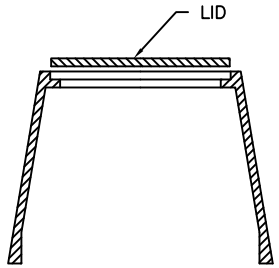

NOTE:

JUNCTION BOX MUST BE APPROVED OR PROVIDED BY UTAH POWER & LIGHT.

Standard Drawing Detail

NORTH LOGAN CITY
ENGINEERING DEPARTMENT
2076 NORTH 1200 EAST
NORTH LOGAN, UT 84341
(435) 752-1310

Name:	**Junction box Details**
Drawing Number:	M03
Date Approved:	02/05/1996
Scale:	Not to Scale
File:	C:\CITY_MAPPING\AUTOCAD\DSTMDwgs\dwg\M03_Junct-bo
Notes:	

CITY STREET MONUMENT

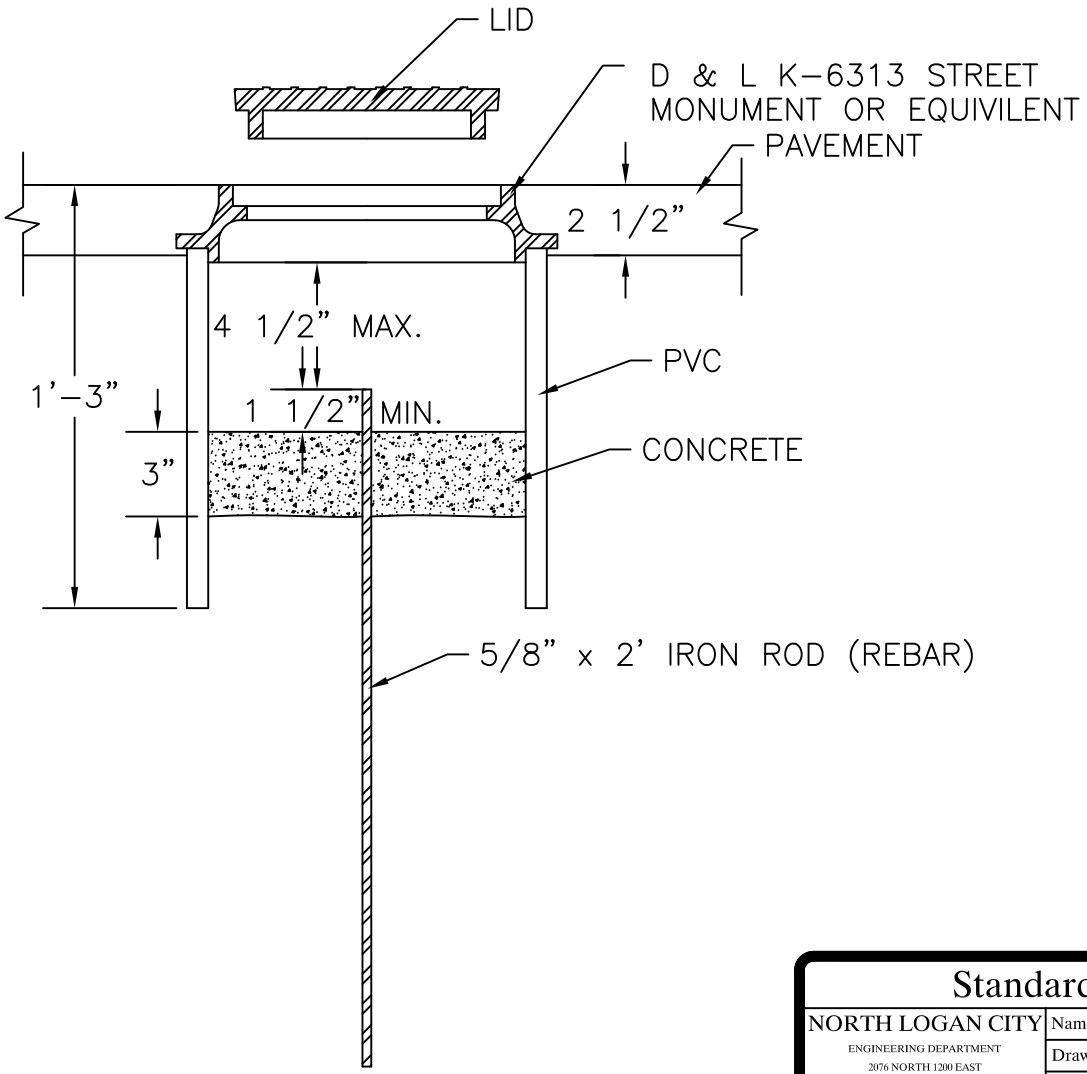

Standard Drawing Detail

NORTH LOGAN CITY
ENGINEERING DEPARTMENT
2076 NORTH 1200 EAST
NORTH LOGAN, UT 84341
(435) 752-1310

Name:	**City Street Monument**
Drawing Number:	M04
Date Approved:	10/12/1995
Scale:	Not to Scale
File:	C:\CITY_MAPPING\AUTOCAD\DSTMDwgs\dwg\M04_Monument
Notes:	

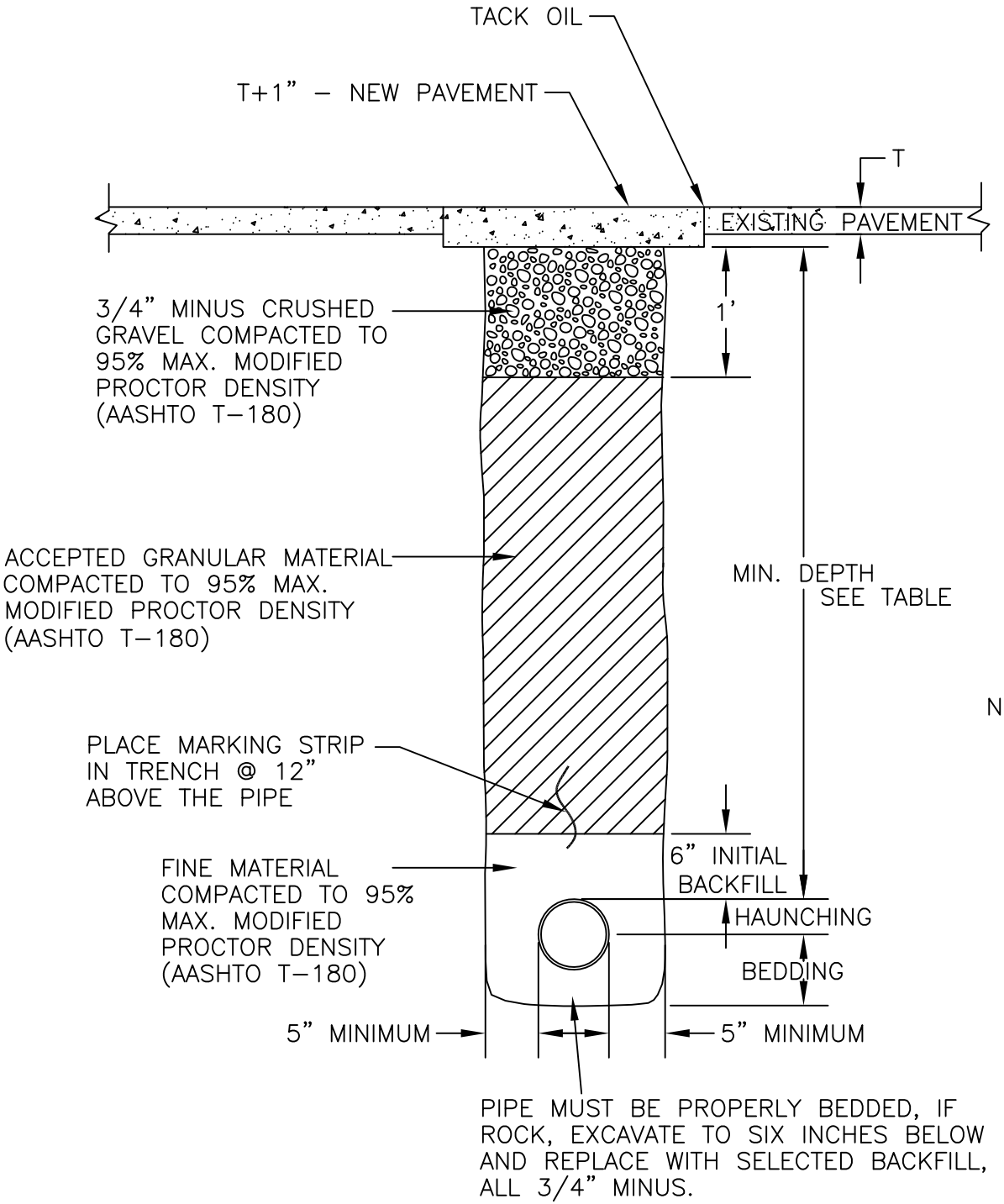

LINE TYPE	MIN. DEPTHS	MARKER COLOR
WATER	5'	BLUE
SEWER	9'	GREEN
GAS	30"	YELLOW
POWER (IN CONDUIT)	18"	RED
POWER (TRENCH CABLE)	36"	RED
PHONE	–	ORANGE

NOTE: BACKFILL FOR WATER LINE INSTALLATION IN EXISTING PAVED ROADWAYS

Standard Drawing Detail

NORTH LOGAN CITY
ENGINEERING DEPARTMENT
2076 NORTH 1200 EAST
NORTH LOGAN, UT 84341
(435) 752-1310

Name: **Backfill Over Pipe Line**

Drawing Number: M05

Date Approved: 10/12/1995

Scale: Not to Scale

File: C:\CITY_MAPPING\AUTOCAD\DSTMDwgs\dwg\M05_Pipebury

Notes:

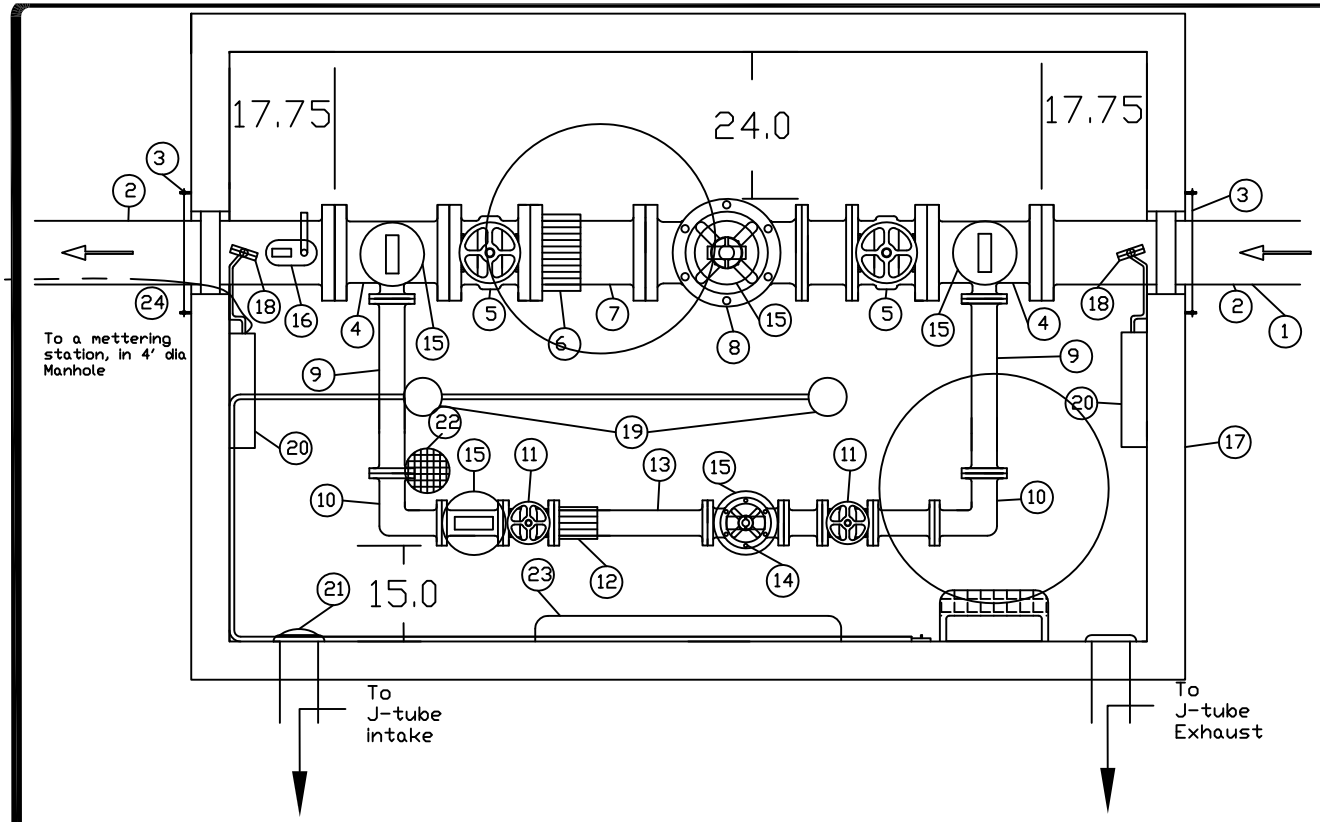

Item #	Quantity	Size	Description
1		10x8	MJ Red
2		8"x6'	Flange x Plain End
3		2'x2'	Thrustplate w/Mega-lug
4	2	8"x4"	Flange Tee w/Plain End Assembly
5	2	8"	Flange RSG Valve w/HW
6	1	8"	Flange Coupling Adapter
7	1	8"x1'-6"	Flange x Plain End
8	1	8"	CLA-Valve 90G-01YBC5KCX
9	2	4"x2'	Flange x Flange- 1'6"
10	2	4"	Flange 90°
11	2	4"	Flange RSG Valve w/HW
12	1	4"	Flange Coupling Adapter
13	1	4"x5"	Flange x Plain End 3'6" cut to length
14	1	4"	CLA-Valve 90G-01YBC5KCX
15	5		Pipe Support
16	1	1"	Combined Air/Vac
17	1	12'x6'x6'	Reinforced Conrete Vault (inside demensions)
18	2		Pressure Gages (See insert)
19	2		Water Proof Light Fixtures
20	2		Pressure Transducer
21	1		Ventilation Van
22	1		Drain out to daylight
23	1		Heater
24			Data Flow Meter model 226B

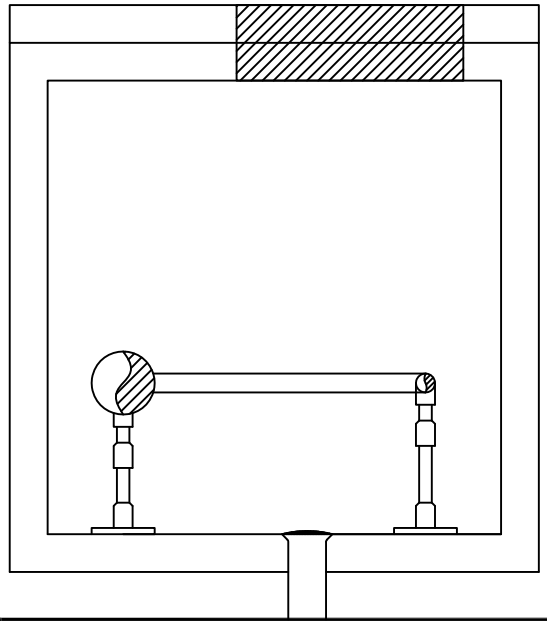

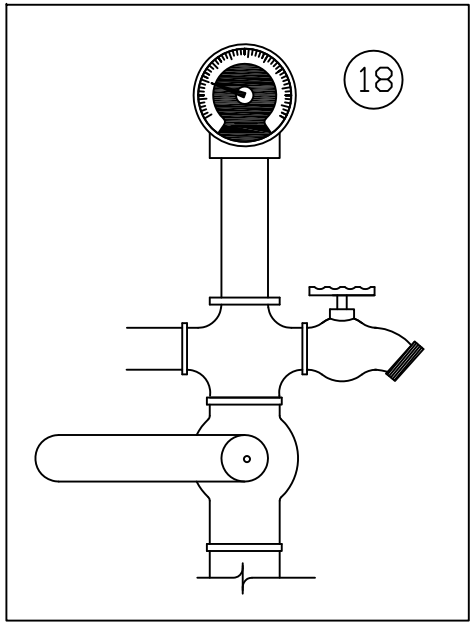

Notes

Piping to be epoxy-painted blue
Vault interior to be painted white
All pipes to be ductile iron

Standard Drawing Detail

NORTH LOGAN CITY
ENGINEERING DEPARTMENT
2076 NORTH 1200 EAST
NORTH LOGAN, UT 84341
(435) 752-1310

Name: **Pressure Reducing Station**
Drawing Number:
Date Approved: 03/05/2005
Scale: Not to Scale
File: C:\CITY_MAPPING\AUTOCAD\DSTMDwgs\dwg\pressure_reducing_station
Notes: